Dell™ Line-Interactive Rack UPS 1000W, 1920/1500W, and 2700/2300W

User's Guide

H919N, J718N, K792N, H928N, K802N, H945N, J727N
J735N, K811N

www.dell.com | support.dell.com

Downloaded from www.Manualslib.com manuals search engine

Notes and Warnings

NOTE: A NOTE indicates important information that helps you make better use of your software.

DANGER: A DANGER indicates an imminently hazardous situation which, if not avoided, will result in death or serious injury.

WARNING: A WARNING indicates a potentially hazardous situation which, if not avoided, could result in death or injury.

CAUTION: A CAUTION indicates a potentially hazardous situation which, if not avoided, may result in minor or moderate injury or in property damage incidents.

DANGER: Observe the following instruction to help prevent an imminently hazardous situation which, if not avoided, will result in death or serious injury:

- This UPS contains **LETHAL VOLTAGES**. All repairs and service should be performed by **AUTHORIZED SERVICE PERSONNEL ONLY**. There are **NO USER SERVICEABLE PARTS** inside the UPS.

Information in this document is subject to change without notice.
© 2009 Dell Inc. All rights reserved.

Reproduction in any manner whatsoever without the written permission of Dell Inc. is strictly forbidden.

Trademarks used in this text: *Dell* and the *DELL* logo are trademarks of Dell Inc.; *National Electrical Code* and *NEC* are registered trademarks of National Fire Protection Association, Inc.; *Phillips* is a registered trademark of Phillips Screw Company.

Other trademarks and trade names may be used in this document to refer to either the entities claiming the marks and names or their products. Dell Inc. disclaims any proprietary interest in trademarks and trade names other than its own.

September 2009 • 164201787 4

Downloaded from www.Manualslib.com manuals search engine

Table of Contents

1 Introduction

Finding Information 8

2 Safety Warnings

3 Installation

Inspecting the Equipment 12

Unpacking the Cabinet 13

Identifying the UPS Rear Panels 15

Identifying the UPS Front Panel 18

UPS Setup 19

Rackmount Setup 19

Tower Setup 24

Installing the EBM 28

Installing the UPS 30

Installing Remote Emergency Power-off 30

UPS Initial Startup 32

4 Operation

UPS Startup and Shutdown 37

Starting the UPS 37

Starting the UPS on Battery 38

UPS Shutdown 38

Control Panel Functions 39

Changing the Language 40

Downloaded from www.Manualslib.com manuals search engine

Display Functions 40
Startup Screen 40
Screen Locked 41
UPS Status 41
Event Log 44
Measurements 44
Control Screens 45
Identification 46
Settings 46

Retrieving the Event Log 50

Behavior on Overload 50

Configuring Load Segments 51
Controlling Load Segments Through the Display 51
Configuring Automatic Start Delay 52
Configuring Automatic on Battery Shutdown 53

Configuring Battery Settings 54
Configuring the UPS for an EBM 54
Running Automatic Battery Tests 55
Configuring Automatic Battery Tests 55

Configuring Automatic Restart 55

5 Additional UPS Features

RS-232 and USB Communication Ports 56
Dell Network Management Card (Optional) 58

Dell UPS Management Software 59

Downloaded from www.Manualslib.com manuals search engine

6 UPS Maintenance

UPS and Battery Care 60

Transporting the UPS 61

Storing the UPS and Batteries 63

When to Replace Batteries 64

Testing Batteries 64

Updating the UPS Firmware 64

7 Specifications

8 Troubleshooting

Accessing Alarms and Conditions 69

UPS Status Menu 69

Event Log Menu 70

Typical Alarms and Conditions 70

Silencing the Alarm 73

Downloaded from www.Manualslib.com manuals search engine

1

Introduction

The Dell™ Line-Interactive Rack uninterruptible power system (UPS) protects your sensitive electronic equipment from basic power problems such as power failures, power sags, power surges, brownouts, and line noise.

Power outages can occur when you least expect them and power quality can be erratic. These power problems have the potential to corrupt critical data, destroy unsaved work sessions, and damage hardware — causing hours of lost productivity and expensive repairs.

With the Dell Line-Interactive Rack UPS, you can safely eliminate the effects of power disturbances and guard the integrity of your equipment. The UPS's flexibility to handle an array of network devices makes it the perfect choice to protect your LANs, servers, workstations, and other electrical equipment.

Figure 1 shows the Dell Line-Interactive Rack UPS.

Figure 1. The Dell Line-Interactive Rack UPS

Downloaded from www.Manualslib.com manuals search engine

Providing outstanding performance and reliability, the UPS's unique benefits include:

- Buck and Boost voltage regulation that ensures regulated voltage to your load by correcting voltage fluctuations.
- Start-on-battery capability for powering up the UPS even if utility power is not available.
- Maintenance is simplified by allowing the safe replacement of batteries without powering down the UPS.
- Extended runtime with an optional External Battery Module (EBM) for 1500–2700W UPS models.
- **2700/2300W 3U UPS models only.** Two-in-one form factor using the UPS in a rackmount configuration or as a standalone cabinet.
- Emergency shutdown control through the Remote Emergency Power-off (REPO) ports.
- Two standard communication ports (USB and DB-9 serial port).
- Optional Dell Network Management Card with enhanced communication capabilities for increased power protection and control.
- Advanced power management with the Dell UPS Management Software for graceful shutdowns and power monitoring.
- Sequential shutdown and load management through separate receptacle groups called load segments.
- Firmware that is easily upgradable without a service call.
- Backed by worldwide agency approvals.

Downloaded from www.Manualslib.com manuals search engine

Finding Information

CAUTION: The *Safety, Environmental, and Regulatory Information* document provides important safety and regulatory information.

What are You Looking For?	Find It Here
• The user's guide for my UPS • The user's guide for the Dell Network Management Card • Dell UPS Management Software	**Dell UPS Disc** **NOTE:** Documentation and software updates can be found at **support.dell.com**.
• Specifications • How to configure UPS settings • How to troubleshoot and solve problems • How to install REPO control	**Dell UPS User's Guide** The user's guide is available on the Dell UPS disc and on **support.dell.com**.
• Safety instructions • Regulatory information • Recycling information	**Safety, Environmental, and Regulatory Information**
• Warranty information • Terms and Conditions (U.S. only) • End User License Agreement	**Dell Warranty and Support Information**
• Support information	**Dell Support Website — support.dell.com** **NOTE:** Select your region or business segment to view the appropriate support site.

Downloaded from www.Manualslib.com manuals search engine

2

Safety Warnings

CAUTION: Before performing the procedures in this document, read and follow the safety instructions and important regulatory information in your *Safety, Environmental, and Regulatory Information* document.

IMPORTANT SAFETY INSTRUCTIONS
SAVE THESE INSTRUCTIONS

This manual contains important instructions that you should follow during installation and maintenance of the UPS and batteries. Please read all instructions before operating the equipment and save this manual for future reference.

DANGER: Observe the following instruction to help prevent an imminently hazardous situation which, if not avoided, will result in death or serious injury:

- This UPS contains **LETHAL VOLTAGES**. All repairs and service should be performed by **AUTHORIZED SERVICE PERSONNEL ONLY**. There are **NO USER SERVICEABLE PARTS** inside the UPS.

WARNING: Observe the following instructions to help prevent a potentially hazardous situation which, if not avoided, could result in death or injury:

- This UPS contains its own energy source (batteries). The output receptacles may carry live voltage even when the UPS is not connected to an AC supply.
- Do not remove or unplug the input cord when the UPS is turned on. This removes the safety ground from the UPS and the equipment connected to the UPS.
- To reduce the risk of fire, connect only to a circuit provided with branch circuit overcurrent protection with an ampere rating in accordance with the National Electrical Code® (NEC®), ANSI/NFPA 70 or your local electrical code:

UPS Output Power	120V	208V	230V
1000W	15A	—	15A
1500W (at 100V) 1920W	20A	—	15A
2300W (at 100V) 2700W	30A	20A	16A

- To reduce the risk of fire or electric shock, install this UPS in a temperature and humidity controlled, indoor environment, free of conductive contaminants. Ambient temperature must not exceed 40°C (104°F). Do not operate near water or excessive humidity (95% maximum).

Downloaded from www.Manualslib.com manuals search engine

- Unpacking the cabinet in a low-temperature environment may cause condensation to occur in and on the cabinet. Do not install the cabinet until the inside and outside of the cabinet are absolutely dry (hazard of electric shock).
- If the UPS requires any type of transportation, disconnect the internal UPS batteries before transporting (see page 61).

CAUTION: Observe the following instructions to help prevent a potentially hazardous situation which, if not avoided, may result in minor or moderate injury or in property damage incidents:

- For PLUGABLE EQUIPMENT, the power outlet shall be installed near the equipment and shall be easily accessible.
- Servicing of batteries should be performed or supervised by personnel knowledgeable about batteries and the required precautions. Keep unauthorized personnel away from batteries.
- Batteries can present a risk of electrical shock or burn from high short-circuit current. The following precautions should be observed: 1) Remove watches, rings, or other metal objects; 2) Use tools with insulated handles; 3) Wear rubber gloves and boots; 4) Do not lay tools or metal parts on top of batteries; 5) Disconnect the charging source prior to connecting or disconnecting battery terminals.
- Determine if the battery is inadvertently grounded. If inadvertently grounded, remove the utility source from the ground. Contact with any part of a grounded battery can result in electrical shock. The likelihood of such shock can be reduced if such grounds are removed during installation and maintenance (applicable to equipment and remote battery supplies not having a grounded supply circuit).
- ELECTRIC ENERGY HAZARD. Do not attempt to alter any battery wiring or connectors. Attempting to alter wiring can cause injury.
- Replace batteries with the same number and type of batteries as originally installed in the UPS.
- Proper disposal of batteries is required. Refer to your local codes for disposal requirements.
- Never dispose of batteries in a fire. Batteries may explode when exposed to flame.
- Do not open or mutilate the battery or batteries. Released electrolyte is harmful to the skin and eyes and may be extremely toxic.
- The 1500–2700W UPS may be connected to a maximum of one External Battery Module (EBM).

Downloaded from www.Manualslib.com manuals search engine

WARNING: Additional instructions for Rack-Mounted Systems

- Your rack kit has been approved only for the rack cabinet provided. It is your responsibility to ensure that installation of the equipment into any other rack complies with all applicable standards. Dell disclaims all liability and warranties with respect to combinations of equipment with any other rack.
- Before installing your equipment in a rack, install all front and side stabilizers. Failure to install stabilizers can allow the rack to tip over.
- Always load from the bottom up, and load the heaviest items first.
- Do not overload the AC power supply branch circuit that provides power to the rack.
- Do not stand or step on any components in the rack.

WARNING: Slide/rail mounted equipment is not to be used as a shelf or work space.

Do not add weight to slide/rail mounted equipment.

Downloaded from www.Manualslib.com manuals search engine

3

Installation

This chapter explains:

- Equipment inspection
- Unpacking the cabinet
- UPS rear panels
- UPS setup and installation, including the External Battery Module (EBM)
- Remote Emergency Power-off (REPO) installation
- Initial startup

Inspecting the Equipment

If any equipment has been damaged during shipment, keep the shipping cartons and packing materials for the carrier or place of purchase and file a claim for shipping damage. If you discover damage after acceptance, file a claim for concealed damage.

To file a claim for shipping damage or concealed damage: 1) File with the carrier within 15 days of receipt of the equipment; 2) Send a copy of the damage claim within 15 days to your service representative.

NOTE: Check the battery recharge date on the shipping carton label. If the date has passed and the batteries were never recharged, do not use the UPS. Contact your service representative.

Downloaded from www.Manualslib.com manuals search engine

Unpacking the Cabinet

CAUTION: Unpacking the cabinet in a low-temperature environment may cause condensation to occur in and on the cabinet. Do not install the cabinet until the inside and outside of the cabinet are absolutely dry (hazard of electric shock).

CAUTION: The cabinet is heavy (see page 65). Use caution to unpack and move the cabinet.

Use care when moving and opening the carton. Leave the components packaged until ready to install.

To unpack the system:

1 Open the outer carton and remove the accessories packaged with the cabinet (see Figure 2).

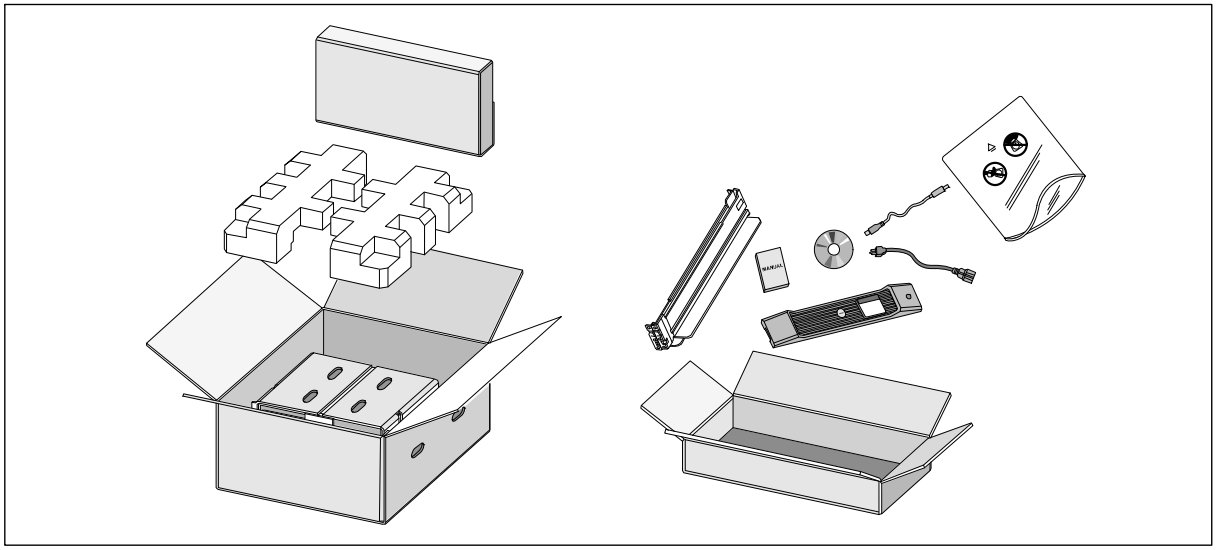

Figure 2. Unpacking the Cabinet

Downloaded from www.Manualslib.com manuals search engine

2 With one person on each side, carefully lift the cabinet out of the outer carton using the handles on the cardboard and set it on a flat, stable surface (see Figure 3).

Place the cabinet in a protected area that has adequate airflow and is free of humidity, flammable gas, and corrosion.

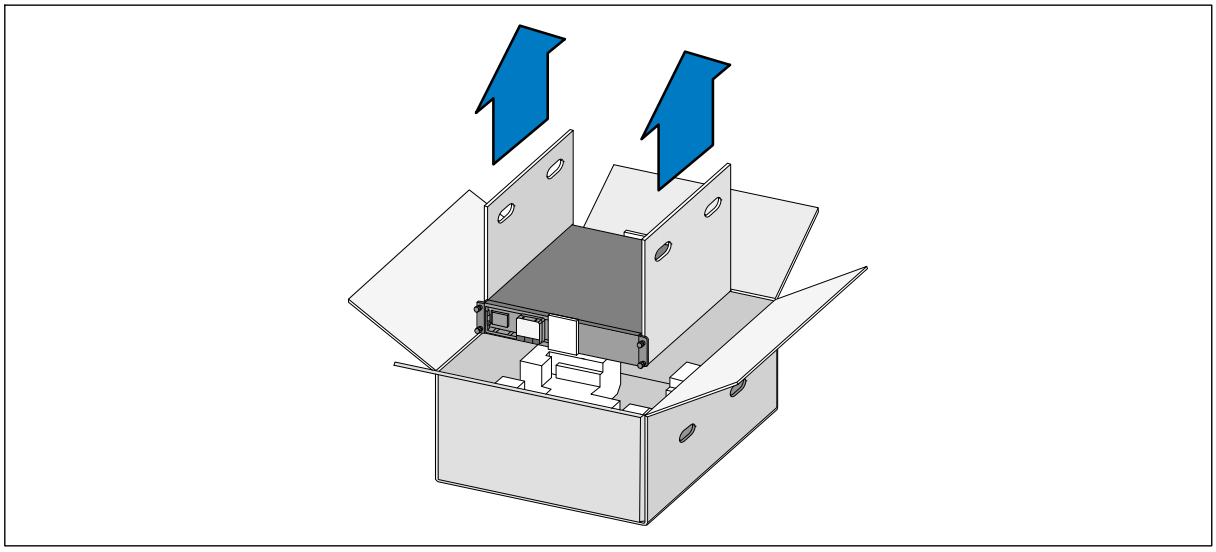

Figure 3. Lifting the Cabinet

3 Discard or recycle the packaging in a responsible manner, or store it for future use.

Downloaded from www.Manualslib.com manuals search engine

Identifying the UPS Rear Panels

This section shows the rear panels of the Dell Line-Interactive Rack models.

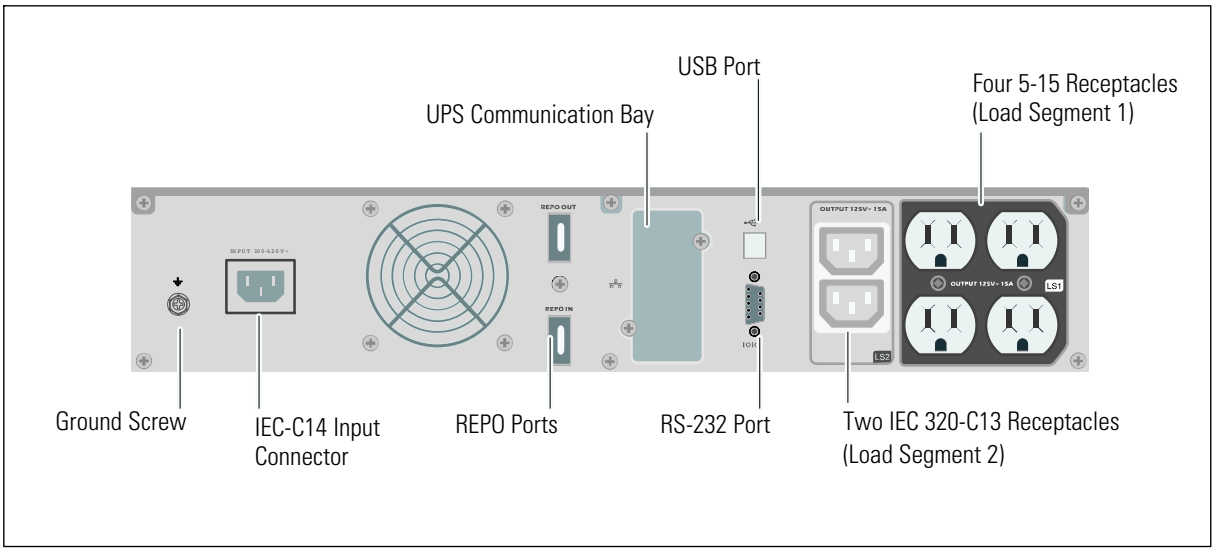

Figure 4. 1000W, 100V/120V Rear Panel

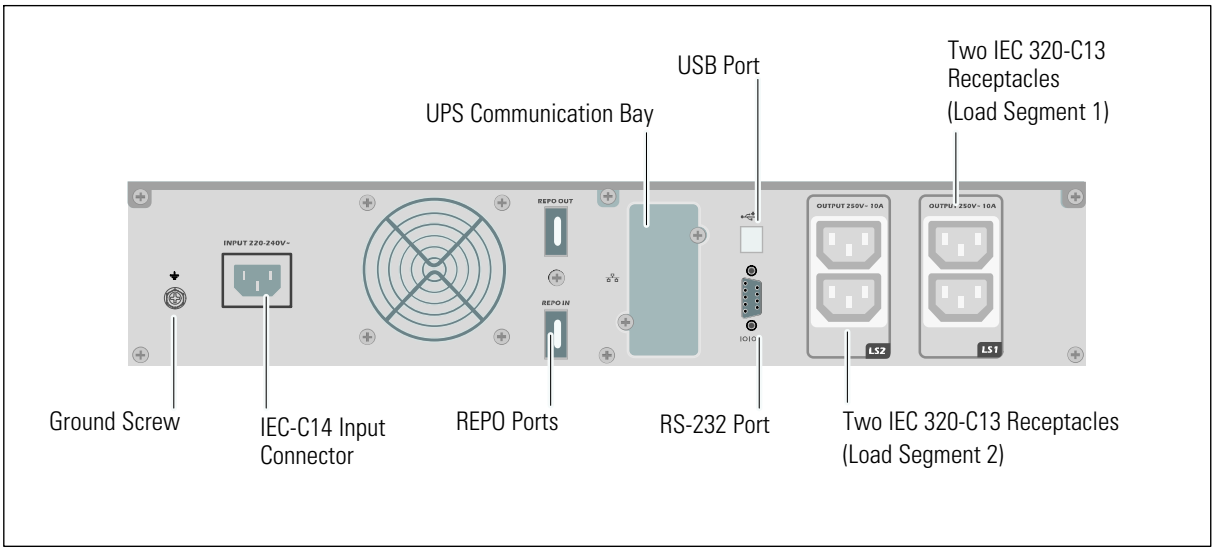

Figure 5. 1000W, 230V Rear Panel

Downloaded from www.Manualslib.com manuals search engine

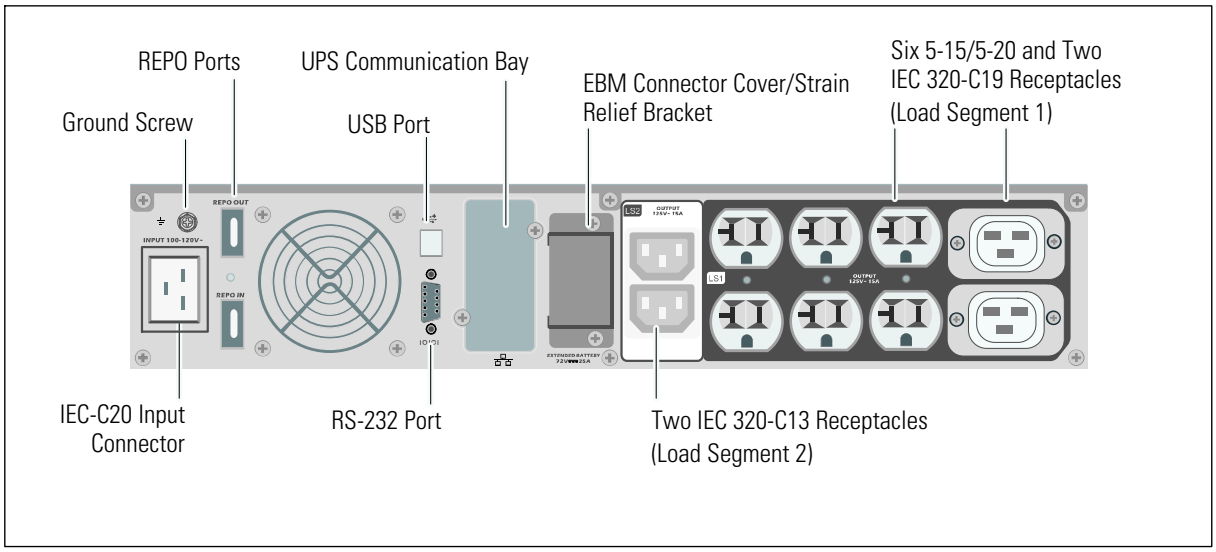

Figure 6. 1920W/120V, 1500W/100V Rear Panel

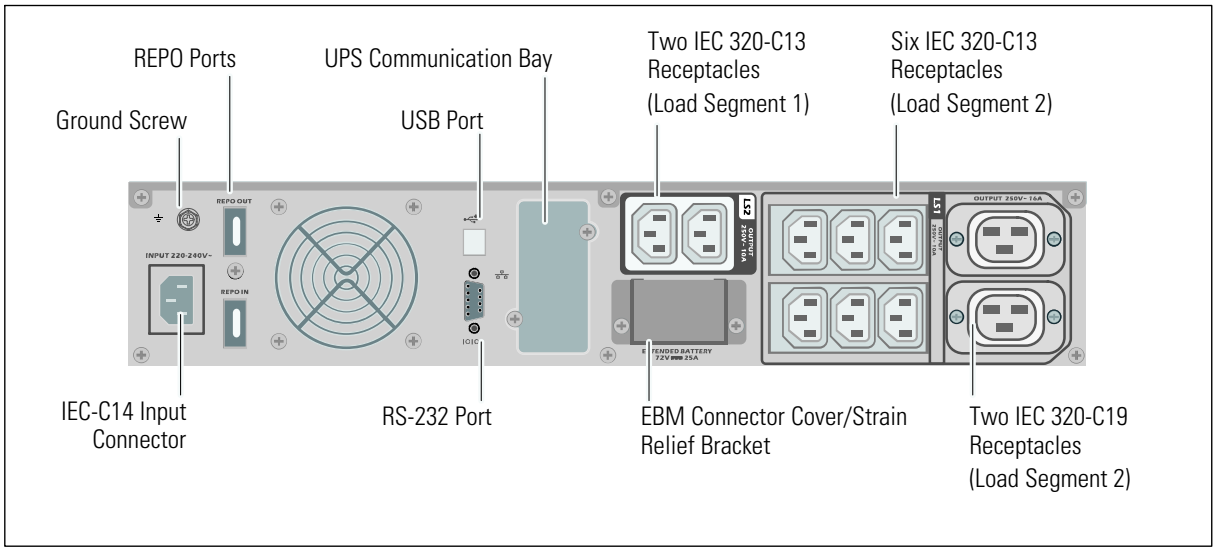

Figure 7. 1920W, 230V Rear Panel

Downloaded from www.Manualslib.com manuals search engine

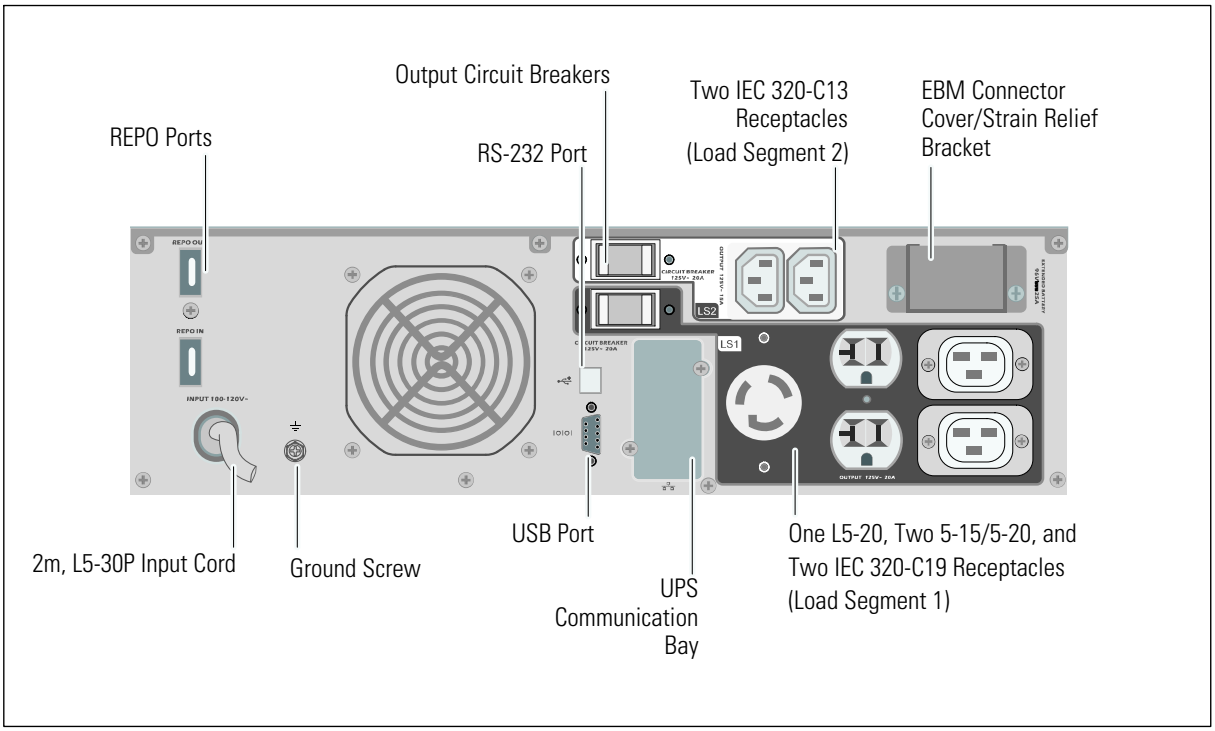

Figure 8. 2700W/120V, 2300W/100V Rear Panel

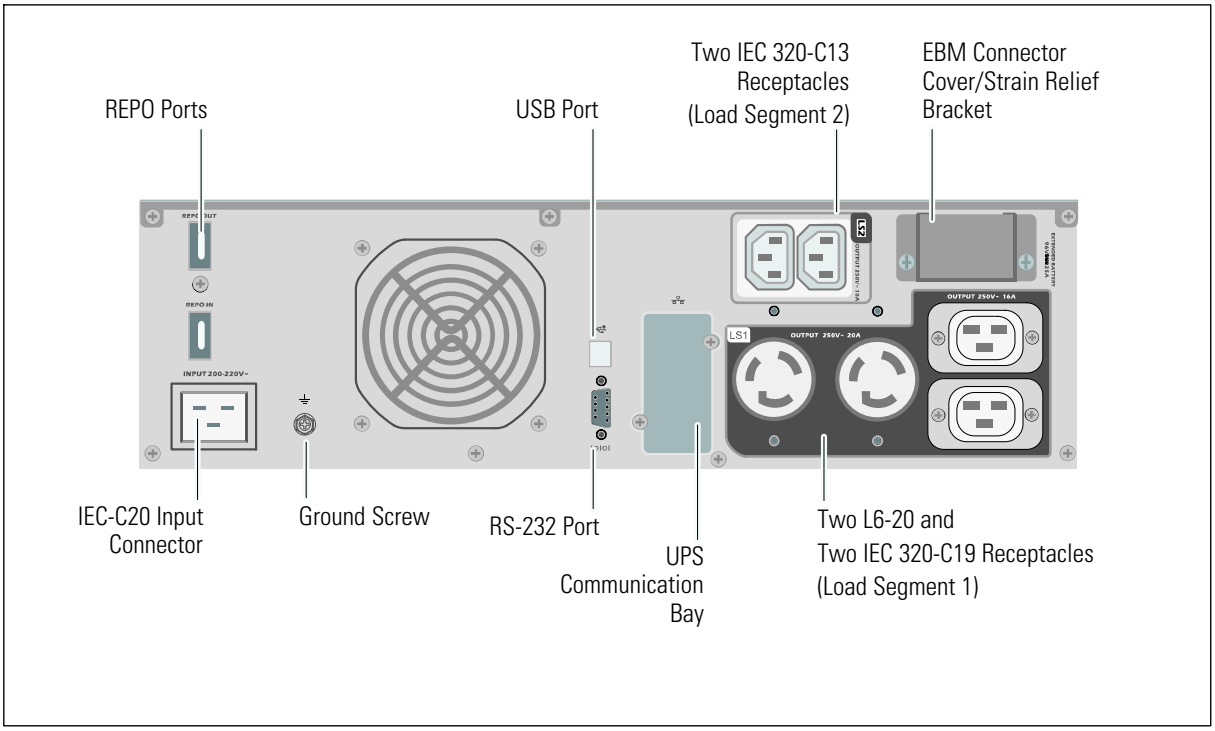

Figure 9. 2700W, 208V Rear Panel

Downloaded from www.Manualslib.com manuals search engine

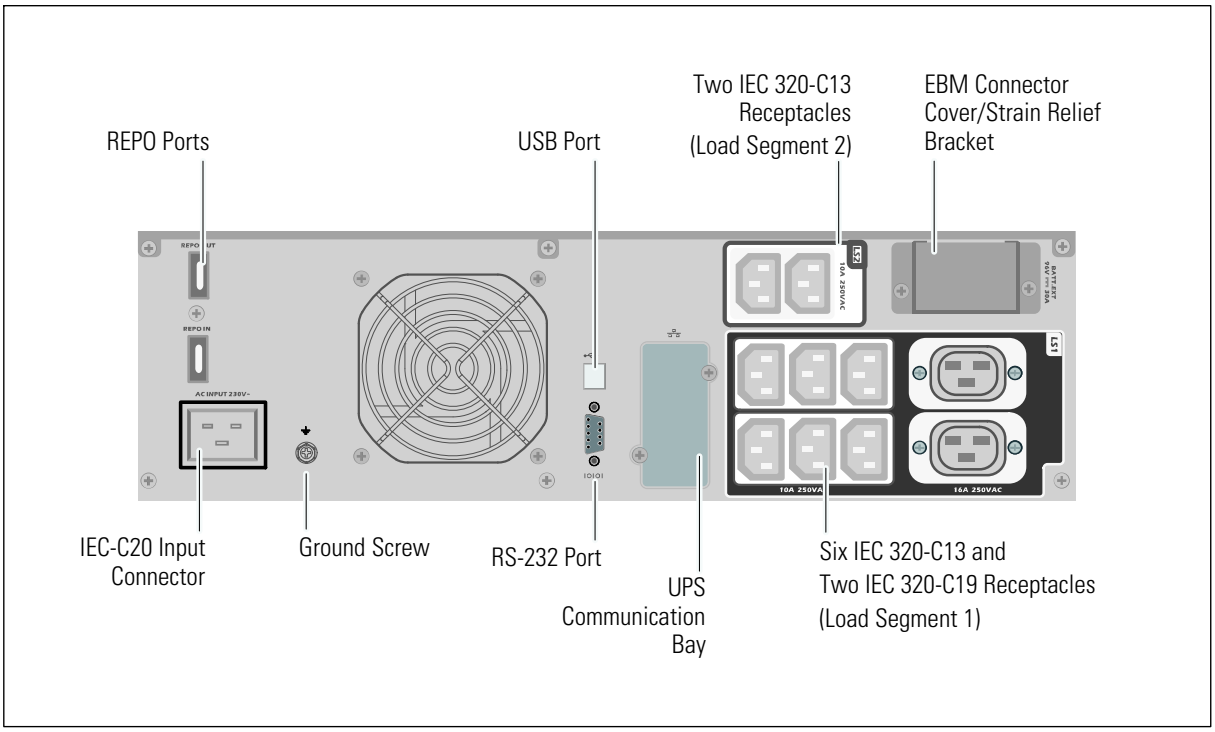

Figure 10. 2700W, 230V Rear Panel

Identifying the UPS Front Panel

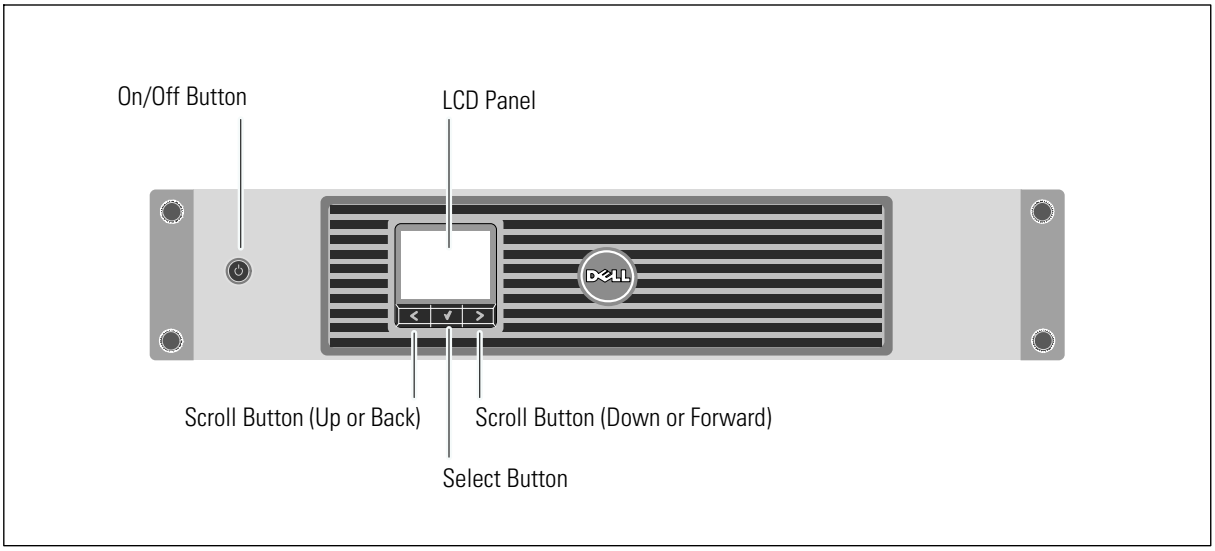

Figure 11. The Dell Line-Interactive Rack UPS Front Panel

Downloaded from www.Manualslib.com manuals search engine

UPS Setup

The Dell Line-Interactive Rack UPS can be installed in 19-inch racks and needs only 2U of valuable rack space (3U for 2700/2300W UPS models).

NOTE: No tools are needed to attach the rack rails to a round- or square-hole EIA rack.

The 2700/2300W UPS models are designed for flexible configurations and can be installed in a rack or as a standalone cabinet.

If you are installing the UPS in a rack, continue to the following section, "Rackmount Setup." To install the 2700/2300W UPS as a standalone cabinet, continue to "Tower Setup" on page 24.

Rackmount Setup

CAUTION: The cabinet is heavy (see page 65): 1) Dell strongly recommends to remove the battery tray from the UPS before lifting. 2) Lifting the cabinets into the rack requires a minimum of two people.

CAUTION: Removing the batteries should be performed or supervised by personnel knowledgeable about batteries and the required precautions. Keep unauthorized personnel away from batteries.

CAUTION: If installing an optional EBM, install the EBM directly below the UPS.

NOTE: Mounting rails are required for each individual cabinet.

To install the UPS and optional EBM in a rack:

1 Remove the internal battery tray from the UPS:

Loosen the thumbscrew on the metal battery cover, slide the cover to the right, and open (see Figure 12).

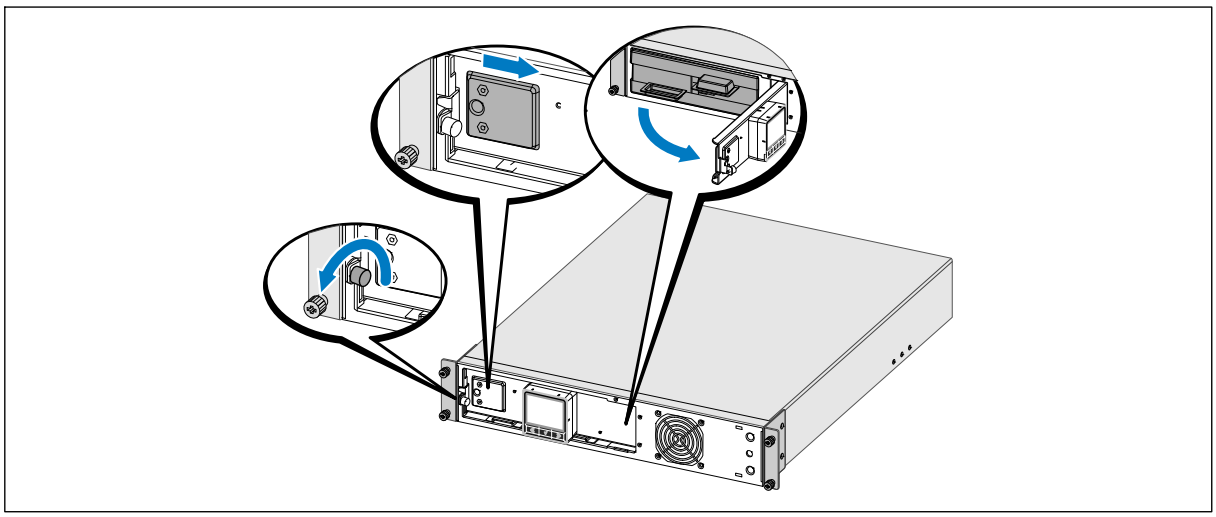

Figure 12. Opening the Metal Battery Cover

Downloaded from www.Manualslib.com manuals search engine

Unclip the right battery connector and move the connector out of the way.

Pull the battery tray out using the plastic tabs and remove the battery tray (see Figure 13).

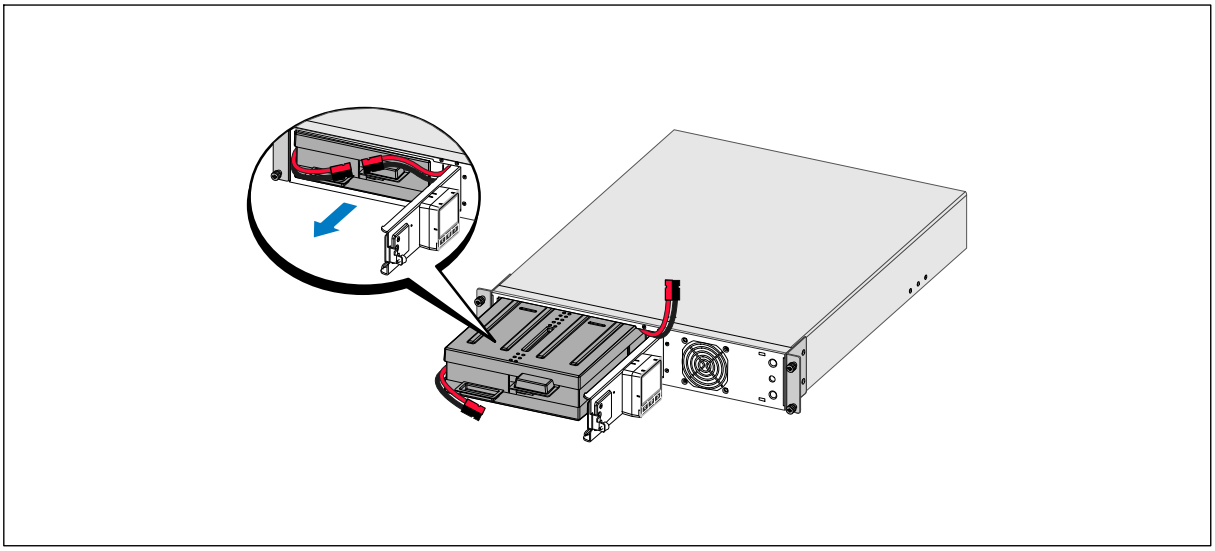

Figure 13. Removing the Battery Tray

2 If installing additional UPSs, repeat Step 1 for each cabinet.

NOTE: The instructions are the same for square-hole racks and unthreaded, round-hole racks. The rails fit both rack styles. The square-hole rack is shown in the illustrations.

3 Select the proper holes in the rail for positioning the cabinet in the desired location in the rack.

The rails should be located at the bottom of the 2U (or 3U for 2700/2300W UPS models) space allocated for the UPS or EBM.

4 Position the end of the left and right rails labeled FRONT facing inward.

Downloaded from www.Manualslib.com manuals search engine

5 Attach the rails to the rack:

Engage the back end of the rail until it fully seats on the vertical rack flange and the hook latch locks in place (see Figure 14).

Pull the rail toward the front.

Push the front end of the rail until it fully seats on the vertical rack flange and the hook latch locks in place.

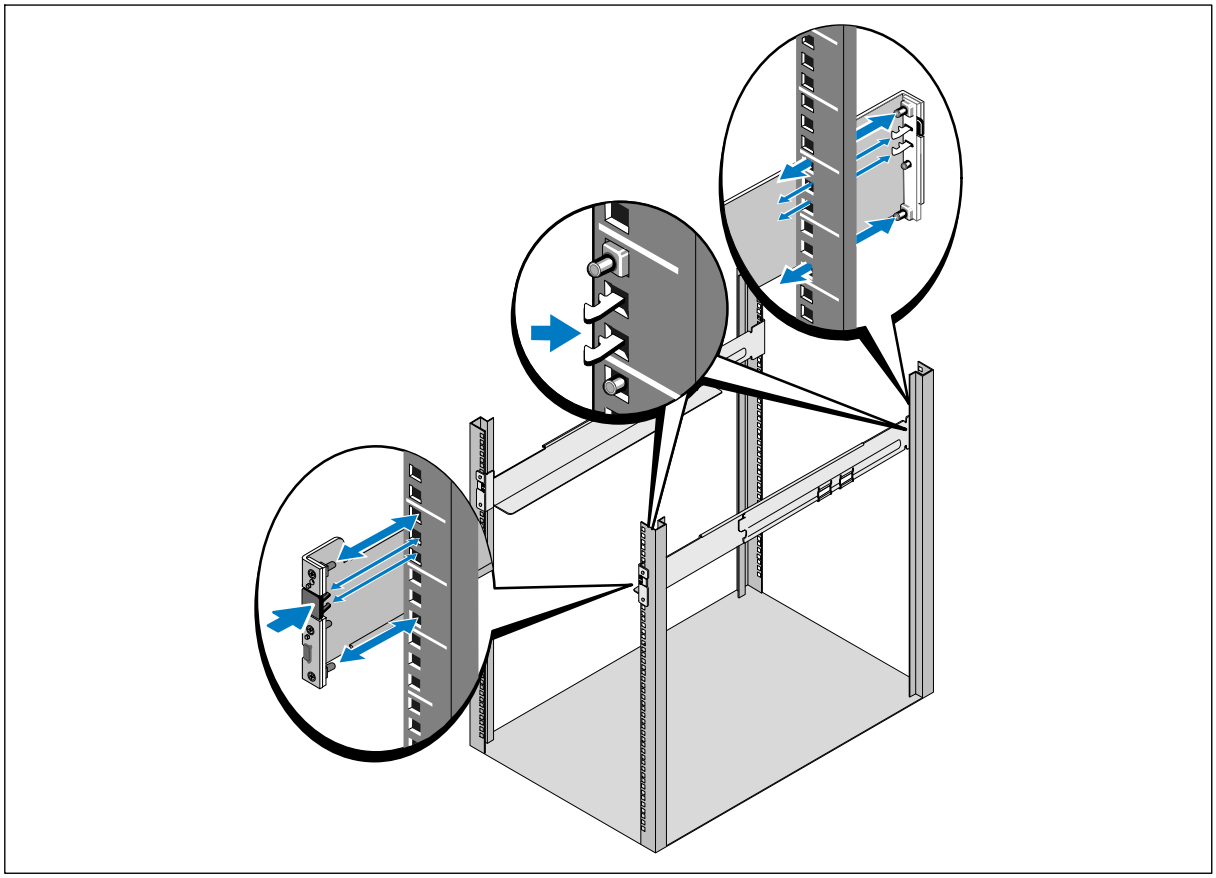

Figure 14. Installing the Rails

Downloaded from www.Manualslib.com manuals search engine

6 Slide the cabinet into the rack (see Figure 15). Repeat for any additional cabinets.

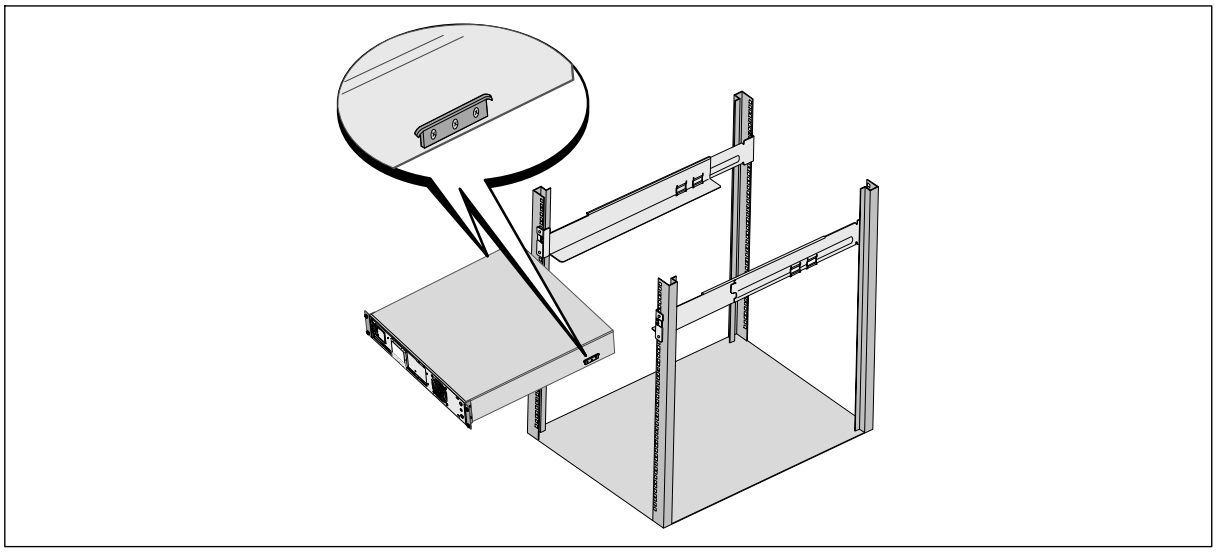

Figure 15. Installing the Cabinet

7 Secure the front of the cabinet to the rack using the four thumbscrews on the mounting brackets (see Figure 16). Tighten by hand; do not use power tools. Repeat for any additional cabinets.

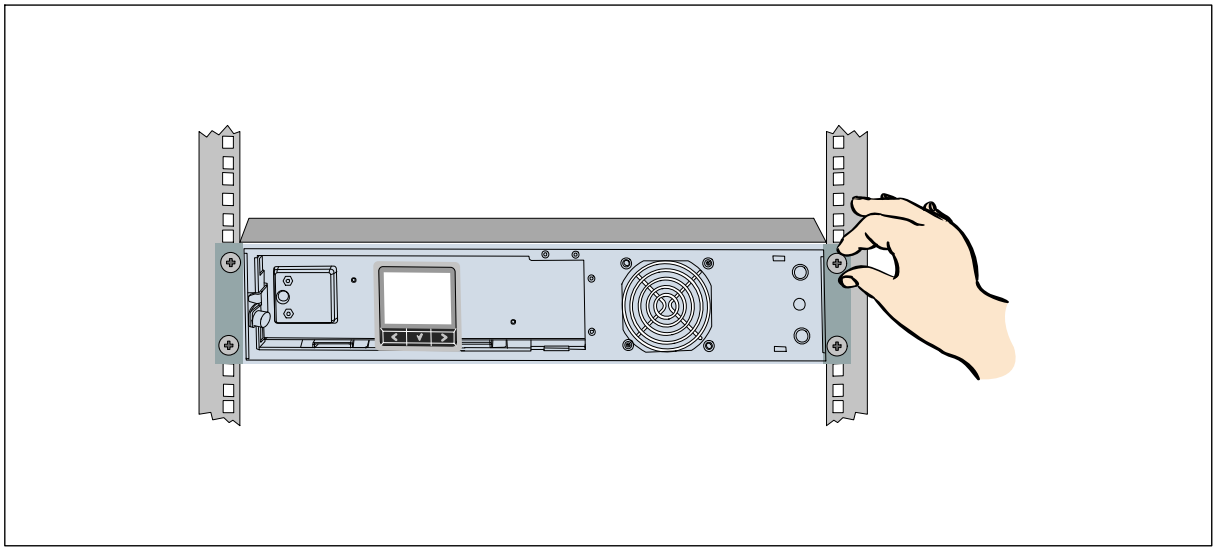

Figure 16. Securing the Cabinet

Downloaded from www.Manualslib.com manuals search engine

8 Install the UPS battery tray (see Figure 17).

NOTE: A small amount of arcing may occur when connecting the batteries. This is normal and does not damage the unit or present any safety concern.

9 Connect the internal battery connector and reclip the right battery connector.

10 Close the metal battery cover.

Adjust the battery connector so that the door closes properly. Push the door slightly to the right and then to left.

11 Tighten the thumbscrew.

Torque the screw to 0.7 Nm (6.2 lb in).

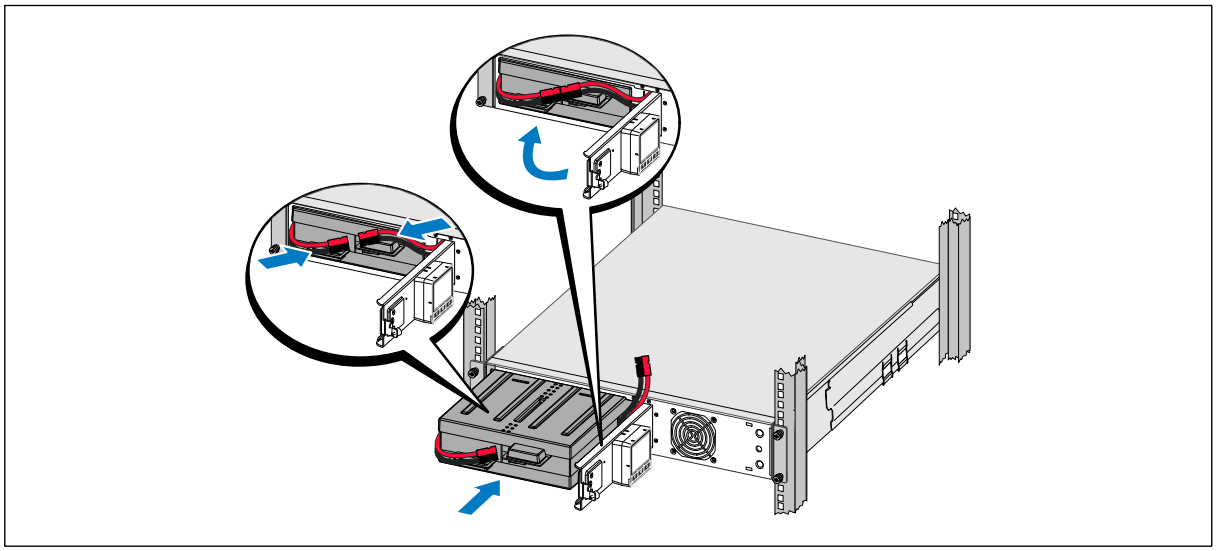

Figure 17. Installing the Battery Tray

Downloaded from www.Manualslib.com manuals search engine

12 Install the UPS front cover (see Figure 18).

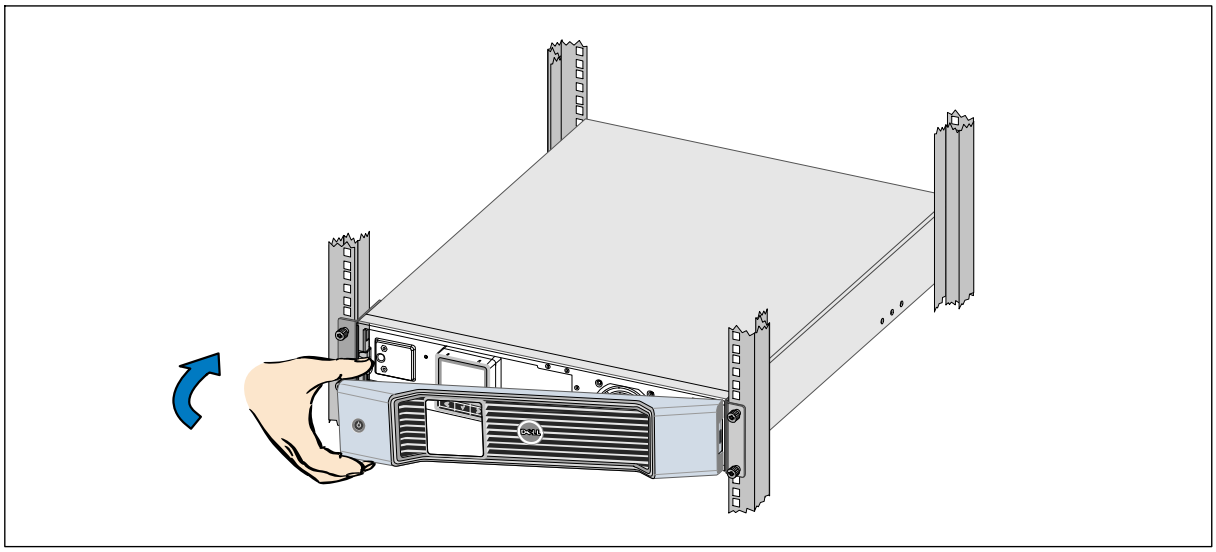

Figure 18. Installing the UPS Front Cover

Tower Setup

CAUTION: The UPS and EBM are heavy (see page 65). Lifting the cabinets into the pedestals requires a minimum of two people.

To install the 2700/2300W 3U UPS model in a tower configuration:

1 Remove the mounting brackets and the rear hold-down brackets from the UPS using a Phillips® #2 screwdriver (see Figure 19).

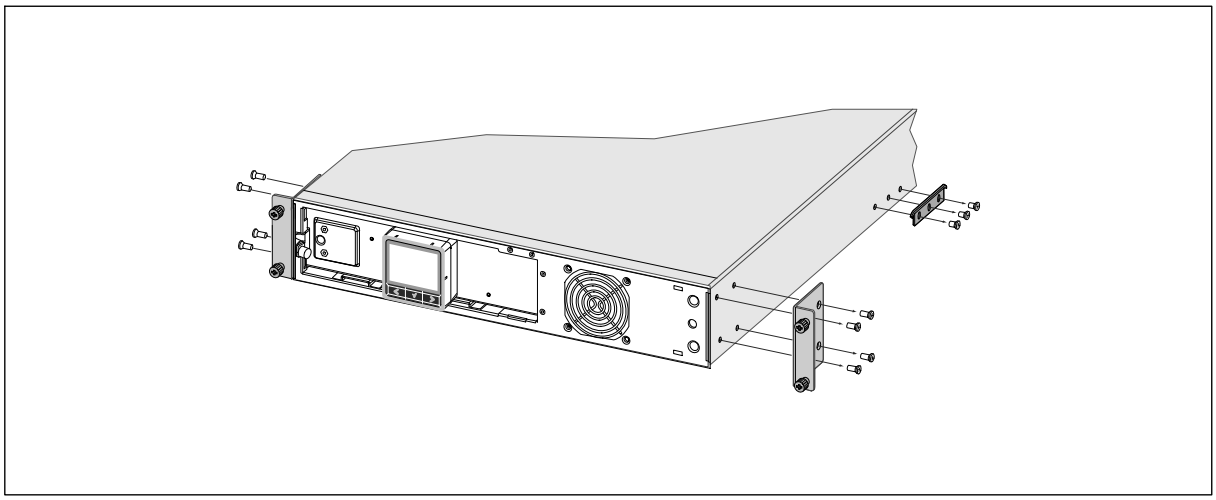

Figure 19. Removing the Mounting Brackets and Rear Hold-Down Brackets

Downloaded from www.Manualslib.com manuals search engine

2 Loosen the thumbscrew on the metal battery cover, slide the cover to the right, and open (see Figure 20).

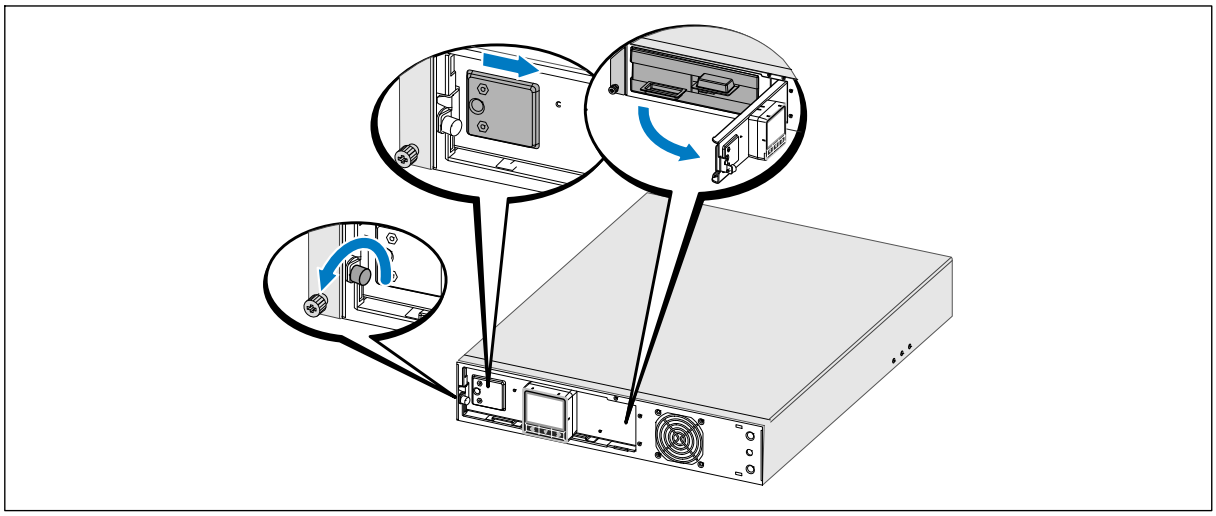

Figure 20. Opening the Metal Battery Cover

3 Connect the internal battery connector.

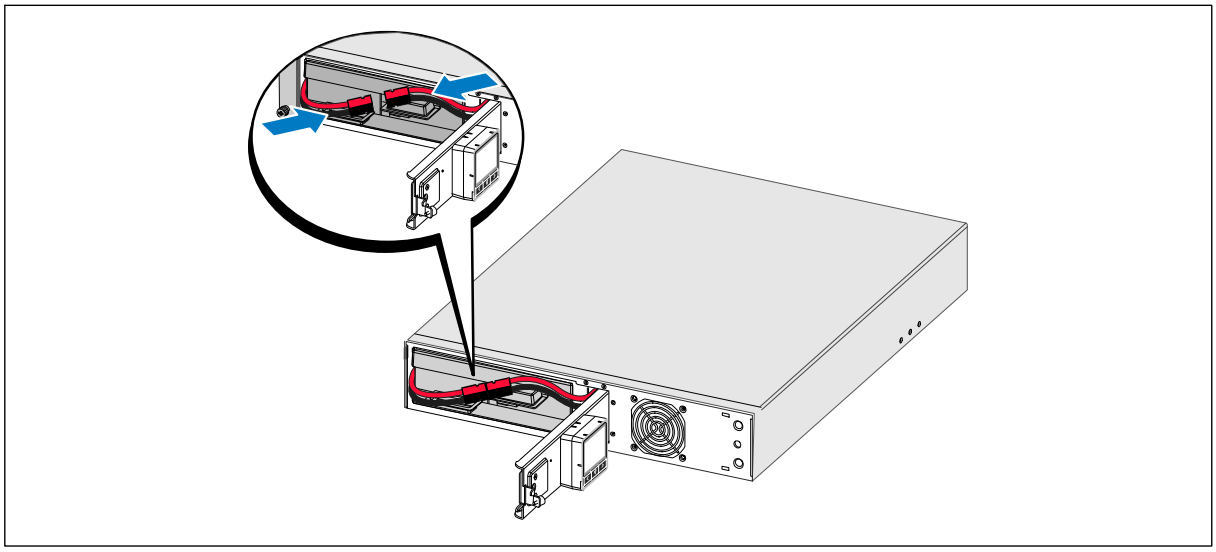

Figure 21. Connecting the Internal Battery Connector

Downloaded from www.Manualslib.com manuals search engine

4 Rotate the control panel 90° counterclockwise (see Figure 22).

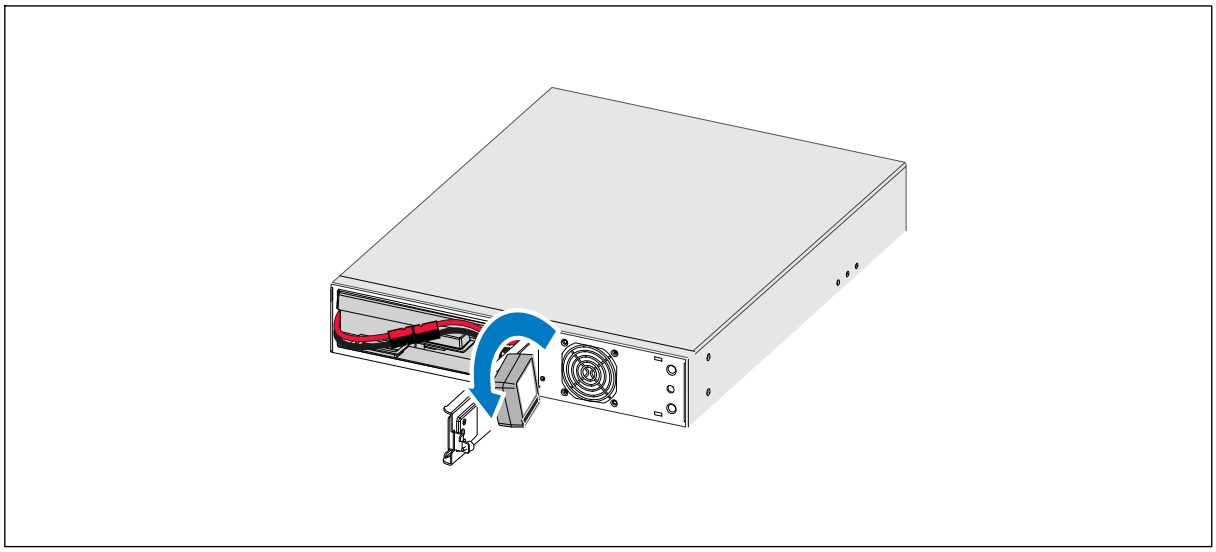

Figure 22. Adjusting the UPS Control Panel Orientation

5 Close the metal battery cover and tighten the thumbscrew.

Torque the screw to 0.7 Nm (6.2 lb in).

6 Rotate the Dell logo 90° counterclockwise and install the UPS front cover (see Figure 23).

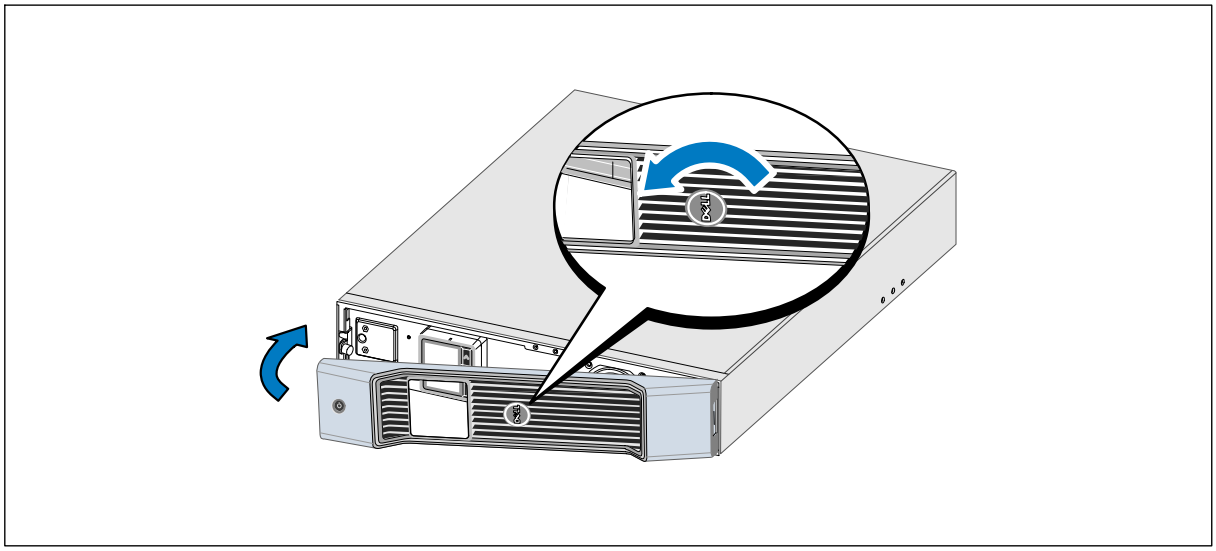

Figure 23. Installing the UPS Front Cover

Downloaded from www.Manualslib.com manuals search engine

NOTE: Dell recommends a minimum of 63.5 mm (2.5") free space behind the UPS rear panel, and a minimum of 127 mm (5") between cabinets.

7 Place the cabinet horizontally so that the right end of the cabinet is accessible (see Figure 24).

8 Align the pedestals with the holes on the end of the cabinet. Push the pedestals in place.

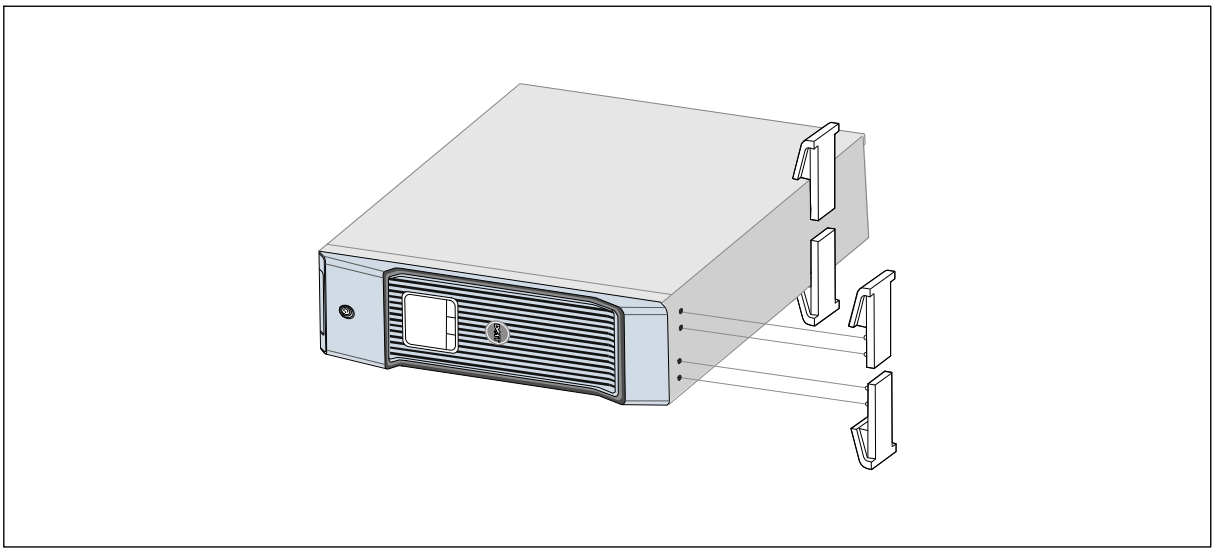

Figure 24. Installing the Pedestals

9 Carefully position the cabinet upright (see Figure 25).

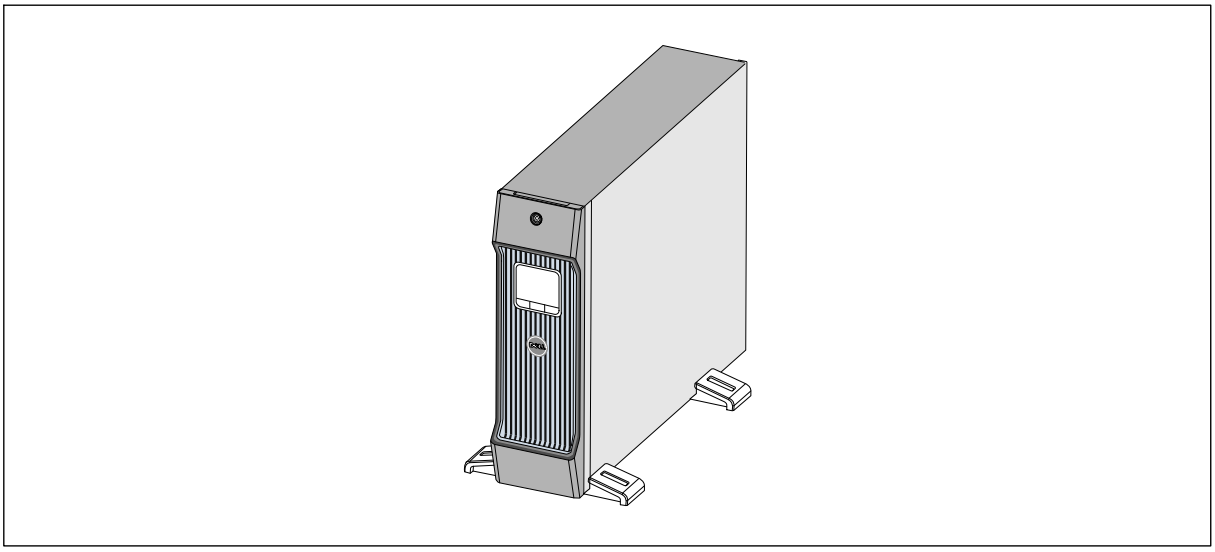

Figure 25. Tower Configuration

Downloaded from www.Manualslib.com manuals search engine

Installing the EBM

NOTE: A small amount of arcing may occur when connecting an EBM to the UPS. This is normal and will not harm personnel. Insert the EBM cable into the UPS battery connector quickly and firmly.

An optional EBM can be installed for 1920–2700W UPS models.

To install the optional EBM:

1 Remove the battery connector cover from the rear panel as shown in Figure 26. Retain the cover and screws.

NOTE: If the UPS is stored or used without an EBM, the battery connector cover must be installed as a safety precaution.

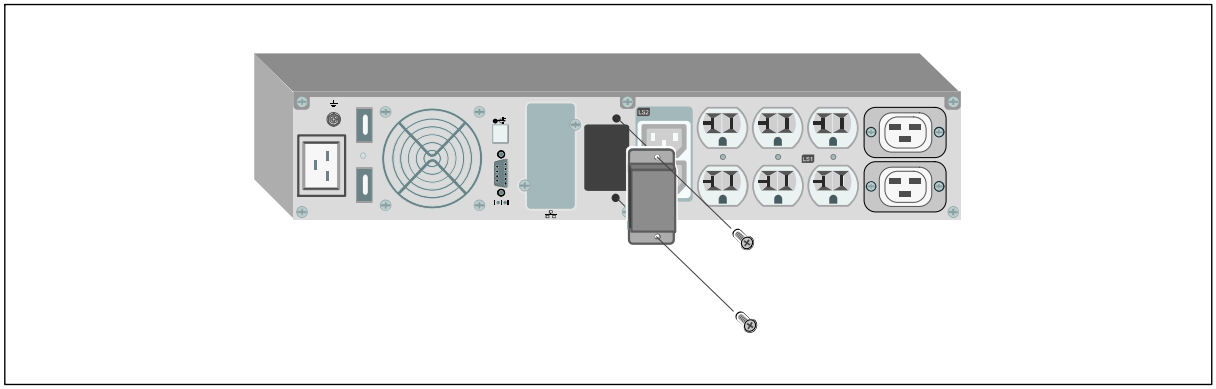

Figure 26. Removing the Battery Connector Cover

Downloaded from www.Manualslib.com manuals search engine

2 Install the battery connector cover under the EBM cable to provide strain relief (see Figure 27).

Rotate the battery connector cover on its side and position under the EBM cable.

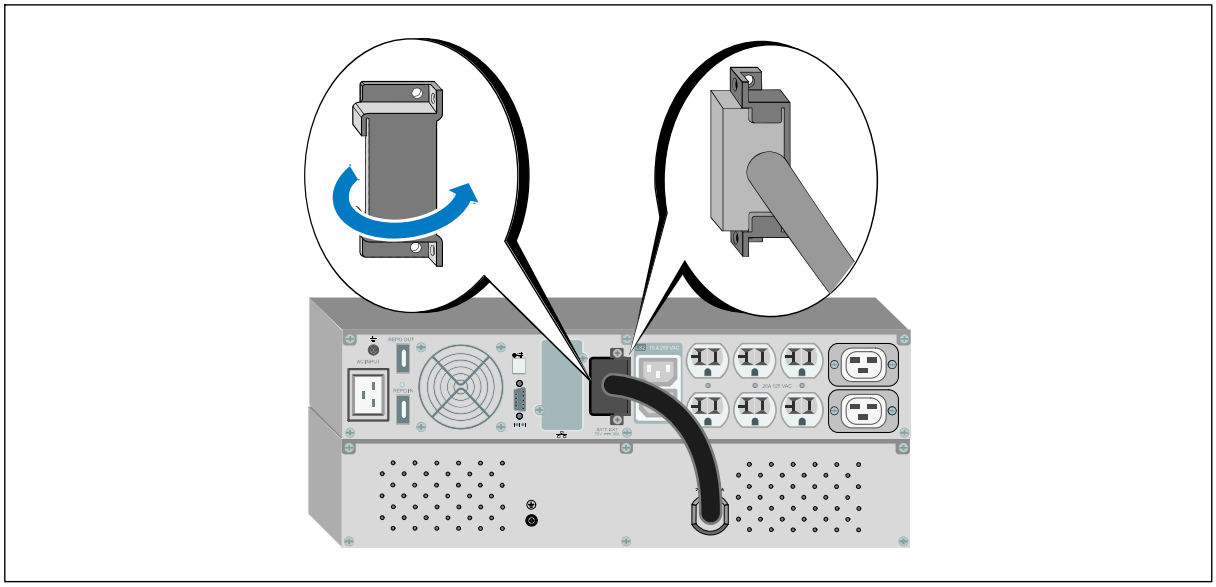

Figure 27. Installing the Battery Connection Cover

3 Plug the EBM cable into the UPS battery connector (see Figure 28).

Secure the battery connector cover to the UPS rear panel using the screws removed in Step 1.

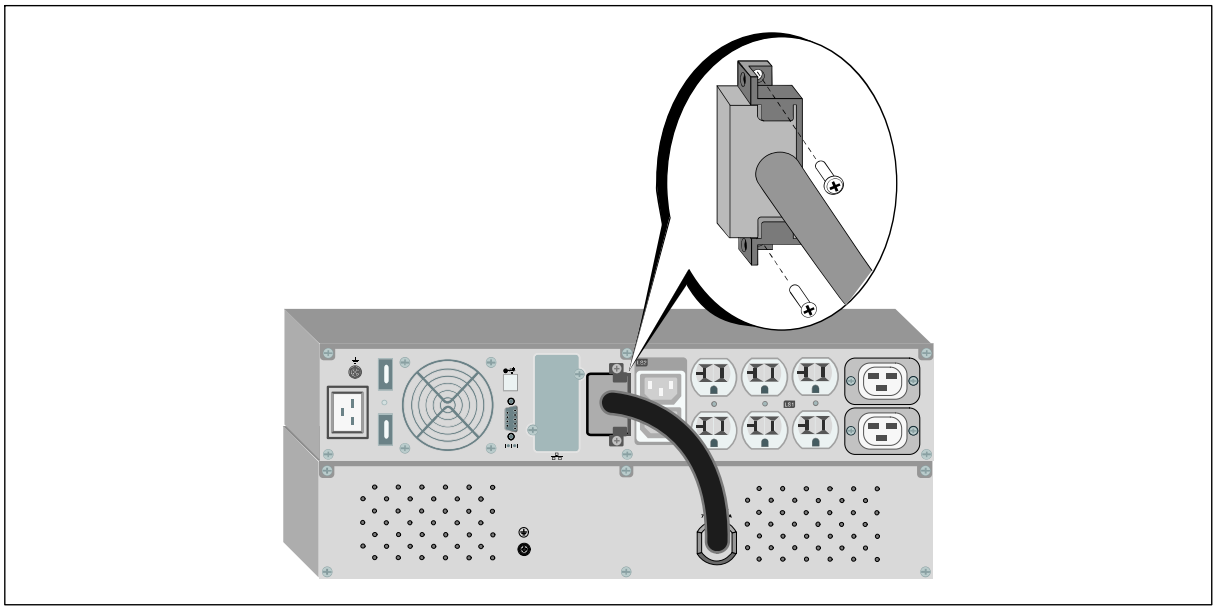

Figure 28. EBM Installation for 1920–2700W UPS Models Only

Downloaded from www.Manualslib.com manuals search engine

Installing the UPS

To install the UPS:

1 If you plan to use Dell UPS Management Software, connect your computer to the USB port using the supplied cable. For more information about communication options, see page 56.

2 If your rack has conductors for grounding or bonding of ungrounded metal parts, connect the ground cable (not supplied) to the ground bonding screw. See "Identifying the UPS Rear Panels" on page 15 for the location of the ground bonding screw for each model.

3 If an emergency power-off (disconnect) switch is required by local codes, see the following section, "Installing Remote Emergency Power-off" (REPO) to install the REPO switch before powering on the UPS.

4 Plug the equipment to be protected into the UPS output receptacles, but do not turn on the protected equipment.

NOTE: Verify that the total equipment ratings do not exceed the UPS capacity to prevent an overload alarm.

Installing Remote Emergency Power-off

REPO is used to shut down the UPS from a distance. For example, this feature can be used for shutting down the load and the UPS by thermal relay, in the event of room overtemperature. When REPO is activated, the UPS shuts down the output and all its power converters immediately. The UPS logic power remains on to issue an alarm.

The REPO feature shuts down the protected equipment immediately and does not follow the orderly shutdown procedure initiated by any power management software. Any devices that are operating on battery power are also shut down immediately.

When the REPO switch is reset, the equipment will not return to utility or battery power until the UPS is manually restarted.

The REPO contacts are normally open.

WARNING: The REPO circuit is an IEC 60950 safety extra low voltage (SELV) circuit. This circuit must be separated from any hazardous voltage circuits by reinforced insulation.

CAUTION: The REPO must not be connected to any utility connected circuits. Reinforced insulation to the utility is required. The REPO switch must have a minimum rating of 24 Vdc and 20 mA and be a dedicated latching-type switch not tied into any other circuit. The REPO signal must remain active for at least 250 ms for proper operation.

CAUTION: To ensure the UPS stops supplying power to the load during any mode of operation, the input power must be disconnected from the UPS when the emergency power-off function is activated.

Downloaded from www.Manualslib.com manuals search engine

NOTE: For Europe, the emergency switch requirements are detailed in Harmonized document HD-384-48 S1, "Electrical Installation of the Buildings, Part 4: Protection for Safety, Chapter 46: Isolation and Switching."

REPO Connections			
Wire Function		**Terminal Wire Size Rating**	**Suggested Wire Size**
REPO	L1	4–0.32 mm^2 (12–22 AWG)	0.82 mm^2 (18 AWG)
	L2		

NOTE: The pins must be open to keep the UPS running. If the UPS shuts down because the REPO connector pins are shorted, restart the UPS by re-opening the REPO connector pins and turning on the UPS manually. Maximum resistance in the shorted loop is 10 ohm.

NOTE: Always test the REPO function before applying your critical load to avoid accidental load loss.

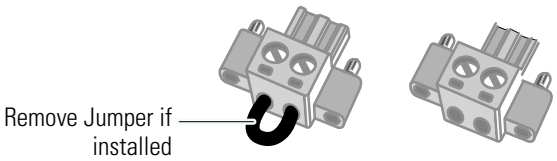

Figure 29. REPO Connector

To install the REPO switch:

1 Verify that the UPS is off and unplugged.

2 Remove the REPO connector from the accessory kit.

NOTE: Verify that there is no jumper installed in the REPO connector. If a jumper is installed, remove it before connecting to the REPO port.

3 Connect the REPO connector to the REPO port labeled "IN" on the UPS rear panel.

4 **Optional.** If you are daisy-chaining the REPO function with another UPS, you can shut down the entire system using a single switch.

Connect the second REPO connector to the REPO port labeled "OUT."

Downloaded from www.Manualslib.com manuals search engine

NOTE: A separate contact must simultaneously cause UPS input AC power to be removed.

5 Connect the switch or circuit to the REPO connector on the UPS rear panel using insulated 0.75 mm^2–0.5 mm^2 (18–20 AWG) wire.

Optional. If you are daisy-chaining the REPO function with another UPS, connect the REPO port labeled "OUT" to the REPO port labeled "IN" on the next UPS. Continue for each UPS. On the last UPS in the daisy-chain, connect a REPO connector (without a jumper) in the REPO port labeled "OUT."

6 Verify that the externally-connected REPO switch is not activated to enable power to the UPS output receptacles.

7 Continue to the following section, "UPS Initial Startup."

UPS Initial Startup

To start up the UPS:

1 Verify that the internal batteries are connected.

2 If an optional EBM is installed, verify that the EBM is connected to the UPS.

3 Verify that the power input to the UPS has adequate upstream overcurrent protection:

Table 1. Minimum Upstream Circuit Breaker Rating

UPS Output Power	120V	208V	230V
1000W	15A	—	15A
1500W (at 100V) 1920W	20A	—	15A
2300W (at 100V) 2700W	30A	20A	16A

Downloaded from www.Manualslib.com manuals search engine

The power cord current ratings are listed in Table 2.

Table 2. Power Cord Ratings

Dell UPS Model and Voltage		Power Cord	Rating	Country	Supplied Cord Set
1000W	100V	JIS C8303 to C13	12A	Japan	Optional
1000W	120V	NEMA 5-15P to C13	15A	North America	Yes
		CNS 10917-2 to C13	15A	Taiwan	Optional
		C13 to C14 Jumper	12A	Japan	Optional
		NBR 14136 to C13	10A	Brazil	Optional
		NBR 6147 to C13	10A	Brazil	Optional
1000W	230V	C13 to C14 Jumper	10A	China/Korea/Australia	Yes
		C13 to C14 Jumper	12/10A	North America/Europe	Yes
		CEE 7/7 Schuko to C13	10A	Europe (Schuko)	Optional
		SEV 1011 to C13	10A	Switzerland	Optional
		AS 3112 to C13	10A	Australia	Optional
		IEC 60884-1 to C13	10A	Switzerland	Optional
		IRAM2073 to C13	10A	Argentina	Optional
		SANS 164-1 to C13	10A	United Kingdom (Old)	Optional
		BS 1363 to C13	10A	United Kingdom (New)	Optional
		CEI 23-50 to C13	10A	Italy	Optional
		KSC8305 to C13	10A	South Korea	Optional
		GB2099.1 to C13	10A	China	Optional
		NBR 6147 to C13	10A	Brazil	Optional
		NBR 14136 to C13	10A	Brazil	Optional
		TI16S3 to C13	10A	Thailand	Optional
		SANS 164-1 to C13	10A	South Africa	Optional
		IS 1293 to C13	10A	India	Optional
		SB107-2-DI to C13	10A	Denmark	Optional
1920W (1500W in Japan and Taiwan)*	100V	NEMA L5-20P to C19	15A	Japan	Yes
	120V	NEMA 5-20P to C19	20A	North America	Yes
		NEMA L5-20P to C19	15A	Taiwan	Yes
		C19 to C20 Jumper	16A	North America	Optional

* There are two power cords in the box, one with BSMI and PSE certified markings that can be used in Taiwan and Japan, another cord is for regions other than Taiwan and Japan.

Downloaded from www.Manualslib.com manuals search engine

Table 2. Power Cord Ratings (continued)

Dell UPS Model and Voltage		Power Cord	Rating	Country	Supplied Cord Set
1920W	230V	C13 to C14 Jumper	10A	China/Korea/Australia	Yes
		C13 to C14 Jumper	12/10A	North America/Europe	Yes
		CEE 7/7 Schuko to C13	10A	Europe (Schuko)	Optional
		SEV 1011 to C13	10A	Switzerland	Optional
		AS 3112 to C13	10A	Australia	Optional
		GB2099 to C13	10A	China	Optional
		IS 1293 to C13	10A	India	Optional
		SANS 164-1 to C13	10A	United Kingdom (Old)	Optional
		BS 1363 to C13	10A	United Kingdom (New)	Optional
		SB107-2-DI to C13	10A	Denmark	Optional
		CEI 23-50 to C13	10A	Italy	Optional
		IRAM2073 to C13	10A	Argentina	Optional
		NBR 6147 to C13	10A	Brazil	Optional
		NBR 14136 to C13	10A	Brazil	Optional
		KSC8305 to C13	10A	South Korea	Optional
		TI16S3 to C13	10A	Thailand	Optional
		SANS 164-1 to C13	10A	South Africa	Optional
2700W	208V	L6-20P to C19	15A	North America	Yes
		C19 to C20 Jumper	16A	North America	Optional

Downloaded from www.Manualslib.com manuals search engine

Table 2. Power Cord Ratings (continued)

Dell UPS Model and Voltage		Power Cord	Rating	Country	Supplied Cord Set
		CEE 7/7 Schuko to C19	16A	Europe (Schuko)	Yes
		BS 1363 to C19	13A	United Kingdom (New)	Yes
		GB2009.1 to C19	16A	China	Yes
		C19 to C20 Jumper	16A	Europe/Australia	Yes
		C19 to C20 Jumper	16A	China	Yes
		BS 546 to C19	15A	United Kingdom(Old)	Optional
		TI16S3 to C19	16A	Thailand	Optional
2700W	230V	AS 3112 to C19	15A	Australia	Optional
		IRAM2073 to C19	16A	Argentina	Optional
		CEI 23-50 to C19	16A	Italy	Optional
		KSC8305 to C19	15A	South Korea	Optional
		IS 1293 to C19	16A	India	Optional
		NBR 14136 to C19	16A	Brazil	Optional
		C19 to C20 Jumper	16A	North America	Optional
		L6-20P to C19	15A	North America	Optional

4 **For models with a detachable power cord.** Plug the detachable UPS power cord into the input connector on the UPS rear panel.

5 Plug the UPS power cord into a power outlet.

The UPS front panel display illuminates. The Dell startup screen changes to the UPS status summary screen. The UPS front panel display shows the flashing Standby icon ⏻.

6 Press the ⏻ button on the UPS front panel.

After the startup is complete, the status icon changes to the appropriate icon based on the UPS operating mode (see Table 4 on page 42).

7 On the UPS status summary screen, press the > button to check for active alarms or notices. Resolve any active alarms before continuing. See "Troubleshooting" on page 69.

If there are no active alarms, a "No Active Alarms" message appears.

8 Verify that the Normal icon appears on the UPS status summary screen, indicating that the UPS is operating normally and any loads are powered (see Table 4 on page 42).

9 If an optional EBM is installed, see "Configuring the UPS for an EBM" on page 54.

Downloaded from www.Manualslib.com manuals search engine

10 To change other factory-set defaults, see “Operation” on page 37.

11 If you installed an optional REPO, test the REPO function:

Activate the external REPO switch. Verify the status change on the UPS display.

Deactivate the external REPO switch and restart the UPS.

NOTE: Dell recommends setting the date and time.

NOTE: At initial startup, the UPS sets system frequency according to input line frequency (input frequency auto-sensing is enabled by default). After initial startup, auto-sensing is disabled until manually re-enabled by output frequency setting.

NOTE: At initial startup, input voltage auto-sensing is enabled by default. After the subsequent startup, auto-sensing is disabled until manually re-enabled by output voltage setting.

NOTE: The internal batteries charge to 90% capacity in less than 4 hours. However, Dell recommends that the batteries charge for 48 hours after installation or long-term storage. If an optional EBM is installed, see the recharge time listed in Table 15 on page 68.

Downloaded from www.Manualslib.com manuals search engine

4

Operation

This chapter contains information on how to use the UPS, including:

- UPS startup and shutdown
- Control panel and display functions
- Retrieving the Event Log
- Behavior on overload
- Configuring load segments, battery settings, and automatic restart

UPS Startup and Shutdown

NOTE: The ⏻ button controls only the UPS output. The ⏻ button has no effect on equipment connected to the UPS.

To start up or shut down the UPS, see:

- "Starting the UPS" on page 37
- "Starting the UPS on Battery" on page 38
- "UPS Shutdown" on page 38

Starting the UPS

To start the UPS:

1. Verify that the UPS power cord is plugged in.
2. Switch on utility power where the UPS is connected.

   The UPS front panel display illuminates. The Dell startup screen changes to the UPS status summary screen. The UPS front panel display shows the Standby mode icon ⏻.
3. Press the ⏻ button on the UPS front panel.

   After the startup is complete, the status icon changes to the appropriate icon based on the UPS operating mode (see Table 4 on page 42).
4. On the UPS status summary screen, press the > button to check for active alarms or notices. Resolve any active alarms before continuing. See "Troubleshooting" on page 69.

   If there are no active alarms, a "No Active Alarms" message appears.
5. Verify that the Normal mode icon appears on the UPS status summary screen, indicating that the UPS is operating normally and any loads are powered.

Downloaded from www.Manualslib.com manuals search engine

Starting the UPS on Battery

NOTE: Before using this feature, the UPS must have been powered by utility power with output enabled at least once.

NOTE: Utility power cannot be present at startup.

To start the UPS on battery:

1 Press the ⏻ button on the UPS front panel until the UPS beeps.

The UPS front panel display illuminates, and the UPS begins the startup sequence.

The UPS cycles through Standby mode to Battery mode. The Battery mode icon displays on the UPS status summary screen. The UPS supplies power to your equipment.

NOTE: The UPS does not assume the load if you press the ⏻ button less than three seconds.

2 Press the > button to check for active alarms or notices.

Ignore the "UPS on Battery" notice and notices that indicate missing utility power. Resolve other active alarms before continuing. See "Troubleshooting" on page 69. After correcting the alarms, restart if necessary.

You can prevent a battery start (requiring utility power at the next startup) by simultaneously pressing the < and > buttons for three seconds. Battery start can be disabled. See the Start on Battery setting on page 47.

UPS Shutdown

To shut down the UPS:

1 Press the ⏻ button on the front panel for three seconds.

The UPS begins to beep. The UPS transfers to Standby mode.

NOTE: Releasing the ⏻ button before three seconds returns the UPS to its original operating state.

2 Switch off utility power where the UPS is connected.

After utility power is removed, the UPS fully shuts down in ten seconds.

Downloaded from www.Manualslib.com manuals search engine

Control Panel Functions

The UPS has a three-button graphical LCD with dual color backlight. Standard backlight is used to light up the display with white text and a blue background. When the UPS has a critical alarm, the backlight changes the text to dark amber and the background to amber. See Figure 30.

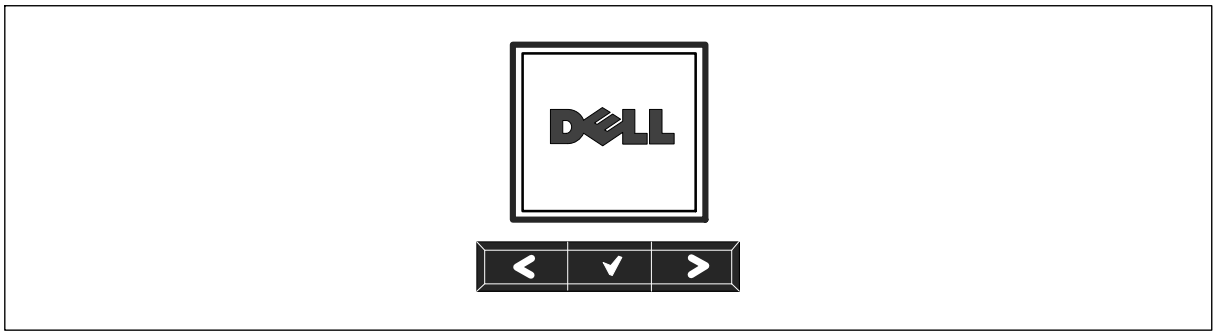

Figure 30. Dell Line-Interactive Rack UPS Control Panel

There are three buttons on the control panel:

- < Scroll up or back
- ✔ Select
- > Scroll down or forward

Table 3 describes the functions of the LCD control buttons.

Table 3. Control Button Functions

Control Button	Sequence	Function
<	Press for less than one second	Scroll back or up to the previous menu.
<	Press for longer than one second	Return/exit back one menu layer without initiating a command or changing a setting.
✔	Press for less than one second	Select the menu or option to be changed.
✔	Press for longer than one second	Save the setting being edited.
>	Press for less than one second	Scroll forward or down to the next menu option.
< >	Press both buttons for three seconds	Temporarily disable the battery startup feature until the next power cycle. The buzzer emits a one second beep to indicate that Battery Start has been disabled.
< ✔ >	Press all three buttons for five seconds	Shortcut for defaulting the language back to English. The buzzer emits a one second beep to indicate that the setting has changed to English.

Downloaded from www.Manualslib.com manuals search engine

To select an option:

1 When scrolling through the settings, the present setting displays for each selection.

2 Press the ✔ button to select the option.

The current setting for the option flashes when selected.

3 Use the < or > buttons to toggle the available options.

4 Set the new option by holding the ✔ button again for one second.

The option stops flashing.

Changing the Language

Language selection is controlled through the user settings. See Table 7 page 46 for information on available languages.

Display Functions

The UPS provides useful information about the UPS itself, load status, events, measurements, identification, and settings through the front panel display.

Startup Screen

During startup, the Dell logo is the default screen. This startup screen displays for five seconds and then defaults to the UPS status summary screen.

The display automatically returns to the UPS status summary screen when no button has been pushed for 15 minutes and no other screen has been locked by a user. When you return to the status summary screen, press the < button for one second to exit back to the menu selections. Selecting UPS Status from the main menu list enables you to scroll through all of the UPS status menu screens, including the status summary screen.

Downloaded from www.Manualslib.com manuals search engine

Screen Locked

To lock a screen, press the ✔ button. The current view stays locked and does not automatically return to the default screen after time-out. When the screen is locked, the image of a key appears on the UPS status summary screen just to the left of the status icon. See Figure 31.

Pushing any button returns the normal button function, unlocks the screen, and removes the lock symbol.

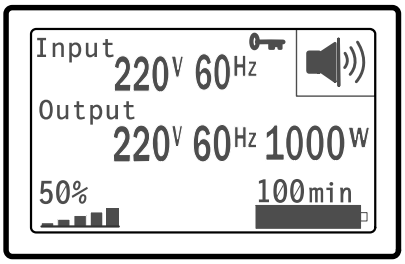

Figure 31. A Locked Screen

Only screens that have dynamic, real-time data updates can be locked. Applicable screens include the status summary screen, measurement screens, active alarms, and the battery status screen.

UPS Status

The UPS status provides separate screens for the following information:

- Status summary, including mode and load
- Notice or alarm status, if any are present
- Battery status, including state and charge level

See Table 4 for examples of the UPS status summary screens. The status icon in the upper right corner of each status summary screen conveys the UPS status or mode.

Basic operating modes include:

- Normal mode
- Battery mode
- Standby mode

Downloaded from www.Manualslib.com manuals search engine

Table 4. Status Summary Screens

Status Summary Screen	Description
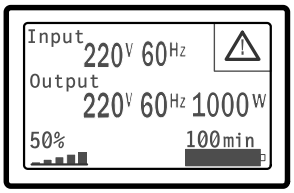	**UPS Critical Failure** The UPS is in Fault mode. The status icon and background are flashing.
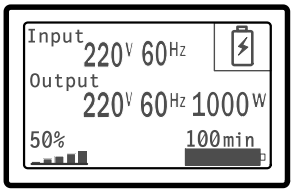	**Battery Mode** The status icon and background of the icon are flashing. An audible alarm (0.5 seconds on/4.5 seconds off) accompanies the switch to Battery mode. When the utility power returns, the UPS transfers to Normal mode operation while the battery recharges.
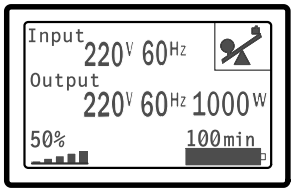	**UPS in Overload Condition** The status icon and background of the icon are flashing.
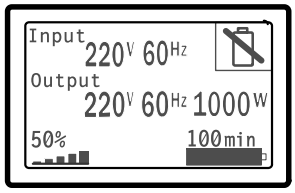	**Bad Battery Detected or Battery Disconnected** The status icon and background of the icon are flashing, along with the outer shell of the battery symbol at the bottom.
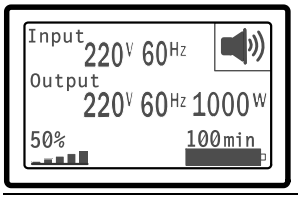	**UPS General Alarms Active** The status icon and background of the icon are flashing.
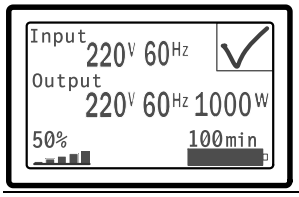	**Battery Test Status** The status when the UPS is performing a battery test.

Downloaded from www.Manualslib.com manuals search engine

Table 4. Status Summary Screens (continued)

Status Summary Screen	Description
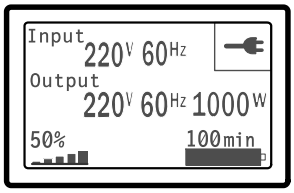	**Normal Mode** The UPS is operating in Normal mode from utility power. The UPS monitors and charges the batteries as needed and provides filtered power protection to your equipment.
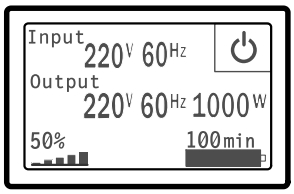	**Standby Mode** When the UPS is turned off and remains plugged into a power outlet, the UPS is in Standby mode and utility power supplies the connected equipment. The UPS is not supporting the load, but is ready to assume the load on command.

The notice and alarm screens are visible only when notices or alarms are active. There is a separate screen for each active notice or alarm. If there are no active notices or alarms, a "No Active Alarms" message appears in a single screen between the UPS status summary and the battery status screen. If there are multiple notices or alarms, scroll through each notice or alarm screen to reach the first battery status screen.

NOTE: Events are not shown in status summary screens. They appear only in the Event Log.

Table 5 describes the available battery status screens. Only one battery status is available at a time.

Table 5. Battery Status Screens

Battery Status Screen	Description
Battery charging	Batteries are charged in constant current mode.
Battery floating	Batteries are charged in constant voltage mode.
Battery resting	Batteries are connected but are not being charged or discharged. (This is part of the normal charging cycle.)
Battery discharging	Batteries are discharging.
Battery disconnected	Batteries are unavailable because they are disconnected.
Charger disabled	The battery charger is off. You can enable the Charger setting from the Settings menu (see page 48).

Downloaded from www.Manualslib.com manuals search engine

Event Log

The Event Log holds up to 50 events. You can scroll through the event screens, beginning with the most recent event.

NOTE: The date format is dependent on the language selection.

The first row of each event screen contains the date (MM/DD/YYYY) and time (hh:mm:ss) at which the event occurred. The second row contains the type of event and code. The event description begins on the third row and may continue to the fourth row. The bottom right corner of the event screen displays two numbers: an ordering number of the event in the log, followed by the total number of events in the log.

If there are no events in the log, the event screen displays "No events in log."

See "Retrieving the Event Log" on page 50.

Measurements

The measurements screens provide useful measurement information on:

- Output watts VA, current, power factor, voltage, and frequency
- Input voltage and frequency
- Battery voltage and percentage charged
- Instantaneous Headroom Watts remaining
- Peak Headroom Watts (the remaining watts available to support the load at peak demand, includes the date and timestamp of the peak demand)
- Peak Consumption Watts (the peak power demand on the UPS, includes the date and timestamp of the peak demand)
- Present kWh Consumption (the kWh demand on the UPS averaged over the past hour)
- Cumulative kWh Consumption (the total kWh usage, includes the date and timestamp since it was last reset)

Downloaded from www.Manualslib.com manuals search engine

Control Screens

Table 6 describes the available control screens.

Table 6. Control Screens

Control Screens	Description
Battery Test	Schedule Battery Test: yes | Cancel Battery test: no Starts a manual battery test. See "Testing Batteries" on page 64.
Reset Error State	Reset Alarms: yes | no Manually clears any latched alarms, such as bad battery detected or DC Bus OV/UV. If a bad battery alarm was also active, reset the battery test status to "Not Tested."
Load Segments	Load segment 1: on | off Load segment 2: on | off These on/off commands override automatic load segment on/off controls made by the Automatic Start Delay and Automatic On Battery Shutdown settings. See "Configuring Load Segments" on page 51.
Restore Factory Settings	Restore Factory Settings: yes | no Available only in Standby mode. Restoring the factory settings: • Returns all user-configurable EEPROM settings to default factory settings • Resets all pending on/off commands • Clears the Event Log and resets all time stamps • Resets the battery test status • Initiates the Self Diagnostics test

Downloaded from www.Manualslib.com manuals search engine

Identification

The identification screens display the following UPS information:

- Type and model
- Part number
- Serial number
- UPS firmware
- Network Management Card firmware

NOTE: The NMC firmware screen displays only if the Network Management Card is installed. See "Dell Network Management Card" on page 58.

Settings

Only available options are displayed.

User settings are not protected by default. You can enable the password through the User Password setting.

Table 7 displays the options that can be changed by the user.

Table 7. Settings

Description	Available Settings	Default Setting
Change Language	[English] [French] [German] [Spanish] [Japanese] [Simplified Chinese] [Russian] [Korean] [Traditional Chinese]	English
User Password	[Enabled] [Disabled] If Enabled, the default password is USER. **NOTE:** If you enter an incorrect password, the message "Wrong Password" appears. Press any button to return to the password screen and retry the password.	Disabled
Audible Alarms	[Enabled] [Disabled] **NOTE:** If you disable audible alarms, it takes effect instantly and remains disabled, even after a power cycle. This differs from the mute feature where the horn is temporarily silenced on any button press, but turns on again if a new alarm is triggered.	Enabled

Downloaded from www.Manualslib.com manuals search engine

Table 7. Settings (continued)

Description	Available Settings	Default Setting
Set Date and Time	Set Month, Day, Year, Hours, Minutes, and Seconds	
	Date:mm/dd/yyyy	01/01/2009
	Time: hh:mm:ss	12:00:00
	NOTE: The date format is dependent on the language selection.	
	NOTE: Time is a 24-hour clock.	
Control Commands from Serial Port	[Enabled] [Disabled]	Enabled
	If Enabled, control commands are accepted through the serial port, USB ports, or option card.	
	If Disabled, configuration and load control commands are restricted to LCD only.	
Output Voltage	[100V] [110V] [120V] [Auto-sensing]	Auto-sensing
	[200V] [208V]	
	[220V] [230V] [240V]	
Output Frequency	[50Hz] [60Hz] [Auto-sensing]	Auto-sensing
Overload Alarm Level	[10%] [20%] [30%]...[100%]	100%
	If 100%, the UPS issues an Output Overload alarm at load > 100%.	
	NOTE: Output Overload Level 1 by default is set to 100% and is configurable from 10% to 100% in 10% increments through the LCD setting menu. This allows customers to be alerted before the UPS has reached its rated capacity limits.	
Automatic Start Delay	[Off] [0s] [1s] [2s]...[32767s]	0s
	See "Configuring Load Segments" on page 51.	
Automatic on Battery Shutdown	[Off] [0s] [1s] [2s]...[32767s]	Off
	See "Configuring Load Segments" on page 51.	
Start on Battery	[Enabled] [Disabled]	Enabled
	NOTE: Battery start is disabled from the factory and remains disabled until the UPS has been powered from utility and enters Standby mode. After the UPS has been started once from utility, the Start on Battery feature is automatically enabled. After this is set by the user, it remains set.	

Downloaded from www.Manualslib.com manuals search engine

Table 7. Settings (continued)

Description	Available Settings	Default Setting
Battery Saving Mode	[Disabled] [10%] [20%] [30%]...[100%] The UPS output is turned off in five minutes if the UPS is on battery and output power is below the selected level.	Disabled
On Battery Notice Delay	[0] [1s] [2s]...[99s] The UPS issues a "UPS on battery" notice in the specified number of seconds after the UPS starts to discharge the batteries.	0s
Site Wiring Fault Alarm	[Enabled] [Disabled]	Disabled for 208V models; Enabled for all others
External Battery Module (EBM)	[0] [1] See "Configuring the UPS for an EBM" on page 54.	0
Charger	[Enabled] [Disabled] If Enabled, batteries charge normally. If Disabled, the battery charger is off.	Enabled
Battery Charge % to Restart	[0%] [10%] [20%] [30%]...[100%] When enabled, automatic restart is made when the battery charge state reaches the selected level. If set to 0, the feature is disabled.	0%
Battery Low Alarm	[Immediate] [2 min] [3 min] [5 min] If you select a value, the battery low alarm triggers when the set amount of backup time (approximately) remains in the batteries.	3 min
Automatic Battery Tests	[Enabled] [Disabled] See "Running Automatic Battery Tests" on page 55.	Enabled

Downloaded from www.Manualslib.com manuals search engine

Table 7. Settings (continued)

Description	Available Settings	Default Setting
Reset Peak Consumption Watts	[No] [Yes] If No, no action. If Yes, the Peak Consumption Watts value is cleared and the date and time stamp for this statistic is set to the current date and time.	No
Reset Cumulative Consumption kWh	[No] [Yes] If No, no action. If Yes, the Cumulative Consumption kWh value is cleared and the date and time stamp for this statistic is set to the current date and time.	No
Reset Peak Headroom Watts	[No] [Yes] If No, no action. If Yes, the Peak Headroom Watts value is cleared and the date and time stamp for this statistic is set to the current date and time.	No
Clear Event Log	The number after "Total events" shows how many events are currently stored in the log. Press the ✔ button for one second to reset the event count to zero and clear the log.	—
LCD Contrast	[-5], [-4], [-3], [-2], [-1], [+0], [+1], [+2], [+3], [+4], [+5] The LCD Contrast is adjustable and the valid range is from -5 to +5. This range covers the maximum adjustment for contrasting the background with the text in the visual display of the control panel.	[+0]

Downloaded from www.Manualslib.com manuals search engine

Retrieving the Event Log

To retrieve the Event Log through the display:

1. Press the < button for one second to go to the main menu selection and scroll down to the Event Log menu using the > button.
2. Press the ✔ button to enter the Event Log list.
3. Scroll through the listed events, notices, and alarms using either the < button or the > button.
4. To return to the main menu, press the < button for one second. The Event Log displays.
5. Press the > button. The UPS status screen displays.

Behavior on Overload

See Table 8 for an explanation of how the UPS responds to an overload condition.

Table 8. Behavior on Overload

Overload Severity	Load Level	On Utility Power	On Battery
Level 1	100% to 101%	Overload alarm only and support load indefinitely	Overload alarm only, support load until low battery shutdown level is reached
Level 2	102% to 110%	Transfer to Fault mode in 2 minutes (±1 sec)	Transfer to Fault mode in 12 seconds (±1 sec) or until low battery shutdown level is reached
Level 3	> 110%	Transfer to Fault mode in 300 ms to 1 sec	Transfer to Fault mode in 300 ms to 1 sec

Downloaded from www.Manualslib.com manuals search engine

Configuring Load Segments

Load segments are sets of receptacles that can be controlled by the Dell UPS Management Software, the Dell Network Management Card, or through the LCD display, providing an orderly shutdown and startup of your equipment. For example, during a power outage, you can keep key pieces of equipment running while you turn off other equipment. This feature allows you to save battery power.

Each Dell Line-Interactive Rack model has two configurable load segments. See "Identifying the UPS Rear Panels" on page 15 for the load segment locations.

To control the load segments with power management software, see your power management software manual for details (refer to the Software CD or **www.dell.com** for the latest information).

Controlling Load Segments Through the Display

To control the load segments through the display:

1. Press the < button for one second to go to the main menu selection and scroll down to the Control menu using the > button.
2. Press the ✔ button to enter the Control menu.
3. Use the > button to scroll to Load Segments.
4. Press the ✔ button.

   The current setting for the option flashes when selected.
5. Select the desired load segment using the < and > buttons.
6. Set the desired load segment ON or OFF using the ✔ button.
7. Press the ✔ button for one second to confirm.
8. Set the other load segment if applicable.

Downloaded from www.Manualslib.com manuals search engine

Configuring Automatic Start Delay

You can configure the load segment to turn on automatically after the utility power returns, if it was shut down by:

- The ⏻ button
- An external command with auto-restart option
- Battery under voltage state
- Automatic on battery shutdown command

You can specify the restart delay time for each load segment: select zero seconds (0s is the default) to restart immediately, select 1–32767 seconds to delay for the specified time, or select Off.

To set the restart delay times for each load segment:

1. Press the < button for one second to go to the main menu selection and scroll down to the Settings menu using the > button.
2. Press the ✔ button to enter the Settings menu.
3. Use the > button to scroll to the Automatic Start Delay option and press the ✔ button.

   The current setting for the option flashes when selected.
4. Set the restart delay for one load segment using the < and > buttons.
5. Press the ✔ button to confirm.
6. Set the restart delay for the other load segment if applicable.
7. Press the ✔ button to confirm.

NOTE: Load segment On/Off commands issued through the Control menu override the user settings for load segments.

NOTE: A single load segment delay applies to both outlets. However, there is an additional built-in one-second delay between closing segment 1 and 2. The delay is always present when an On command is issued for both segments at the same time.

Downloaded from www.Manualslib.com manuals search engine

Configuring Automatic on Battery Shutdown

If set to Off (default), the load segment turns off only when commanded manually by the ⏻ button, an external command, or through the display (Control > Load Segments).

If set to zero seconds (0s), the load segment turns off automatically when the UPS on Battery state activates.

If you select a value, the load segment turns off automatically after the selected delay while the UPS operates on battery, but the shutdown is cancelled if the utility returns before the delay has expired.

To set the shutdown times for each load segment:

1. Press the < button for one second to go to the main menu selection and scroll down to the Settings menu using the > button.
2. Press the ✔ button to enter the Settings menu.
3. Use the > button to scroll to the Automatic on Battery Shutdown option and press the ✔ button.

   The options display and the current settings flash when selected.
4. Set the shutdown delay for one load segment using the < and > buttons.
5. Press the ✔ button to confirm.
6. Set the shutdown delay for the other load segment if applicable.
7. Press the ✔ button to confirm.

Downloaded from www.Manualslib.com manuals search engine

Configuring Battery Settings

Configure the UPS settings for an installed EBM, including whether to run automatic battery tests and automatic restart configuration.

Configuring the UPS for an EBM

If the UPS is not configured for the EBM, the UPS reports less battery time remaining on the UPS front panel and to any remote software. You may receive a shutdown warning prematurely. To ensure maximum battery runtime when using power management software, configure the UPS for the EBM:

1. Press the < button for one second to go to the main menu selection and scroll down to the Settings menu using the > button.
2. Press the ✔ button to enter the Settings menu.
3. Use the > button to scroll to the External Battery Module option and press the ✔ button.

   The battery number value begins to flash.
4. Set the battery number value using the < and > buttons.

Configuration	Setting
UPS only (internal batteries)	0 (default)
UPS + 1 EBM	1

NOTE: Runtime is automatically adjusted based on present load levels and whether an EBM is configured.

5. Press the ✔ button to confirm.

Downloaded from www.Manualslib.com manuals search engine

Running Automatic Battery Tests

The automatic discharge test, enabled by default, runs during the transition from Float to Rest mode. After the test completes, the charge cycle restarts to completely charge the batteries and then continues to Rest mode normally. The automatic test runs approximately once every three months and does not run again until after three more Float to Rest mode transitions. If a manual battery test is requested, the automatic battery test timer is reset so it will not run for the next three months.

For an automatic battery test to run:

- The Automatic Battery Tests setting must be enabled for the automatic battery tests to run. (See the following section, "Configuring Automatic Battery Tests.")
- The batteries must be fully charged.
- The UPS must be in Normal mode with no active alarms.
- The load must be higher than 10%.

Configuring Automatic Battery Tests

To configure the automatic battery tests:

1. Press the < button for one second to go to the main menu selection and scroll down to the Settings menu using the > button.
2. Press the ✔ button to enter the Settings menu.
3. Use the > button to scroll to the Automatic Battery Tests option and press the ✔ button.

   The option begins to flash.
4. Select whether to enable or disable the automatic battery test using the < and > buttons.
5. Press the ✔ button to confirm.

Configuring Automatic Restart

The UPS automatically restarts if the utility power returns after the output was shut off due to depleted batteries, a shutdown input signal, or automatic shutdown command.

You can set the load segment for the amount of time to delay the restart when utility power returns, using the Automatic Start Delay setting. You can also configure UPS restart to depend on the battery charge level, using the Battery Charge % to Restart setting.

Downloaded from www.Manualslib.com manuals search engine

5

Additional UPS Features

This chapter describes:

- Communication ports (RS-232 and USB)
- Dell Network Management Card
- Dell UPS Management Software

RS-232 and USB Communication Ports

To establish communication between the UPS and a computer, connect your computer to one of the UPS communication ports using an appropriate communication cable (not supplied). See "Identifying the UPS Rear Panels" on page 15 for the communication port locations.

When the communication cable is installed, power management software can exchange data with the UPS. The software polls the UPS for detailed information on the status of the power environment. If a power emergency occurs, the software initiates the saving of all data and an orderly shutdown of the equipment.

The cable pins for the RS-232 communication port are identified in Figure 32, and the pin functions are described in Table 9.

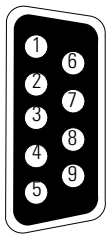

Figure 32. RS-232 Communication Port (DB-9 Connector)

Downloaded from www.Manualslib.com manuals search engine

Table 9. RS-232 Communication Port Pin Assignment

Pin	Signal Name	Function	Direction from the UPS
1		Unused	—
2	Tx	Transmit to external device	Out
3	Rx	Receive from external device	In
4		Unused	—
5	GND	Signal common (tied to chassis)	—
6		Unused	—
7		Unused	—
8		Unused	—
9		Unused	—

*Unused pins must be left free on all models.

Downloaded from www.Manualslib.com manuals search engine

Dell Network Management Card (Optional)

The Dell Line-Interactive Rack UPS has one available communication bay, which supports the optional Dell Network Management Card. See Figure 33 for the location of the communication bay.

It is not necessary to shut down the UPS before installing a communication card.

1 Remove the slot cover secured by two screws. Retain the screws.

2 Insert the communication card into the slot.

3 Secure the card with both screws.

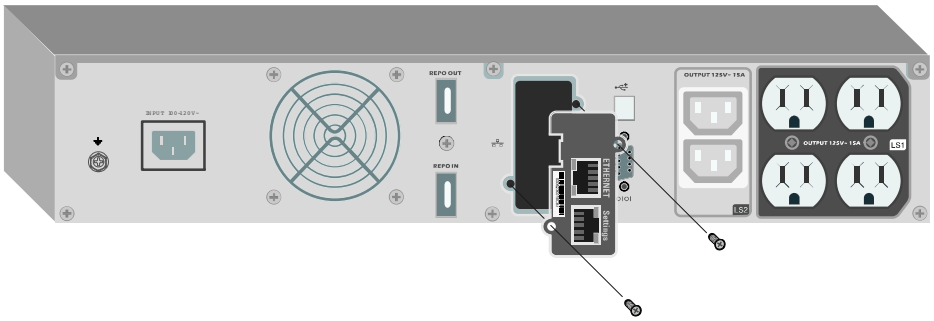

Figure 33. Dell Network Management Card

For details on disabling control commands from the Dell Network Management Card, see the Control Commands from Serial Port setting on page 47.

Refer to the *Dell Network Management Card User's Guide* for more information.

Downloaded from www.Manualslib.com manuals search engine

Dell UPS Management Software

Each Dell Line-Interactive Rack UPS ships with Dell UPS Management Software.

Dell UPS Management Software provides up-to-date graphics of UPS power and system data and power flow. It also gives you a complete record of critical power events, and it notifies you of important UPS or power information. If there is a power outage and the Dell Line-Interactive Rack UPS battery power becomes low, the software can automatically shut down your computer system to protect your data before the UPS shutdown occurs.

For details on disabling control commands from the software, see the user setting for Control Commands from Serial Port setting on page 47.

Downloaded from www.Manualslib.com manuals search engine

6

UPS Maintenance

This chapter explains how to:

- Care for the UPS and batteries
- Transport the UPS
- Store the UPS and batteries
- Test the batteries
- Update the UPS firmware

UPS and Battery Care

For the best preventive maintenance, keep the area around the UPS clean and dust-free. If the atmosphere is very dusty, clean the outside of the system with a vacuum cleaner. For full battery life, keep the UPS at an ambient temperature of 25°C (77°F).

NOTE: The batteries in the UPS are rated for a 3–5 year service life. The length of service life varies, depending on the frequency of usage and ambient temperature. Batteries used beyond expected service life will often have severely reduced runtimes. Replace batteries at least every 5 years to keep units running at peak efficiency.

Downloaded from www.Manualslib.com manuals search engine

Transporting the UPS

NOTE: The internal UPS batteries MUST be disconnected before transportation.

CAUTION: The following procedure should be performed or supervised by personnel knowledgeable about batteries and the required precautions. Keep unauthorized personnel away from batteries.

If the UPS requires any type of transportation, the batteries must be disconnected (but not removed) before the unit is transported:

1 Verify that the UPS is off and unplugged.

2 Place the UPS on a flat, stable surface with the front of the cabinet facing you.

3 Remove the UPS front cover (see Figure 34).

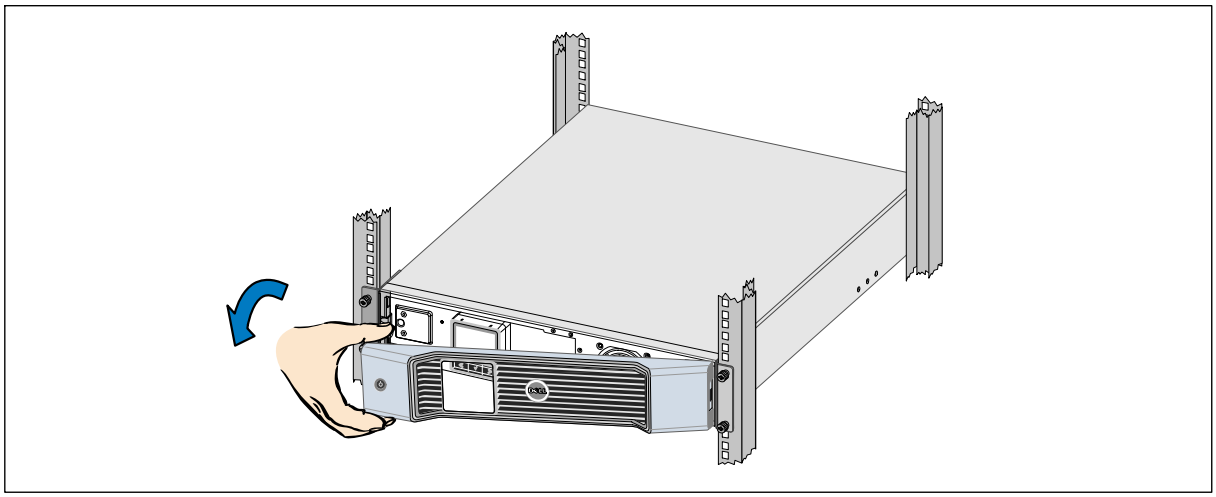

Figure 34. Removing the UPS Front Cover

Downloaded from www.Manualslib.com manuals search engine

4 Open the metal battery cover.

Loosen the thumbscrew on the metal battery cover, slide the cover to the right, and open (see Figure 35).

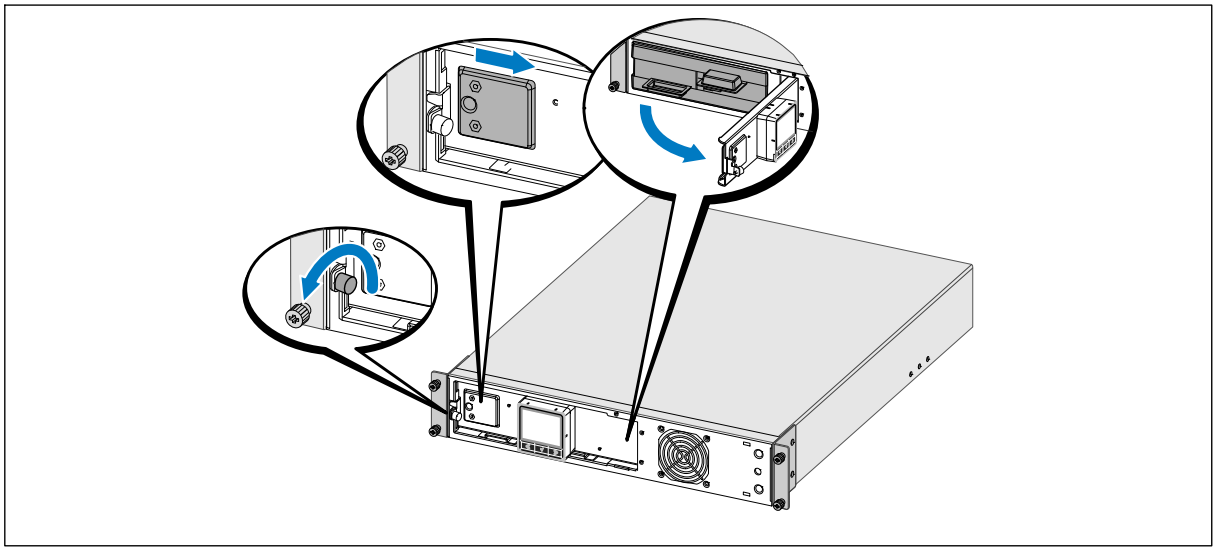

Figure 35. Opening the Metal Battery Cover

5 Disconnect the internal battery connectors (see Figure 36).

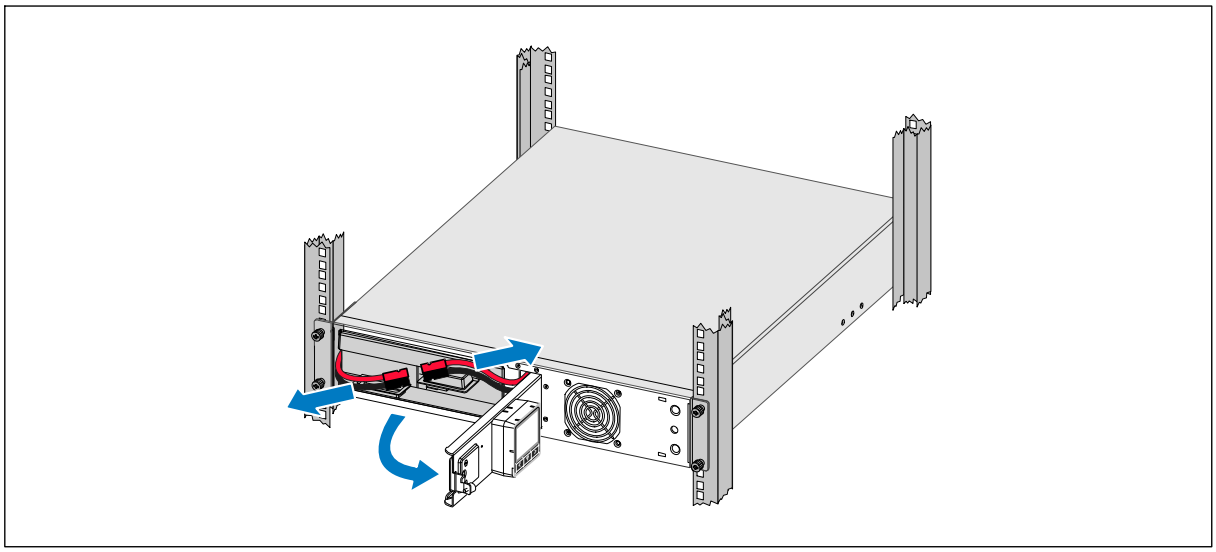

Figure 36. Disconnecting the Internal Battery Connector

Downloaded from www.Manualslib.com manuals search engine

6 Close the metal battery cover.

Adjust the battery connector so that the door closes properly. Push the door slightly to the right and then to left.

7 Tighten the thumbscrew.

Torque the screw to 0.7 Nm (6.2 lb in).

8 Replace the UPS front cover (see Figure 37).

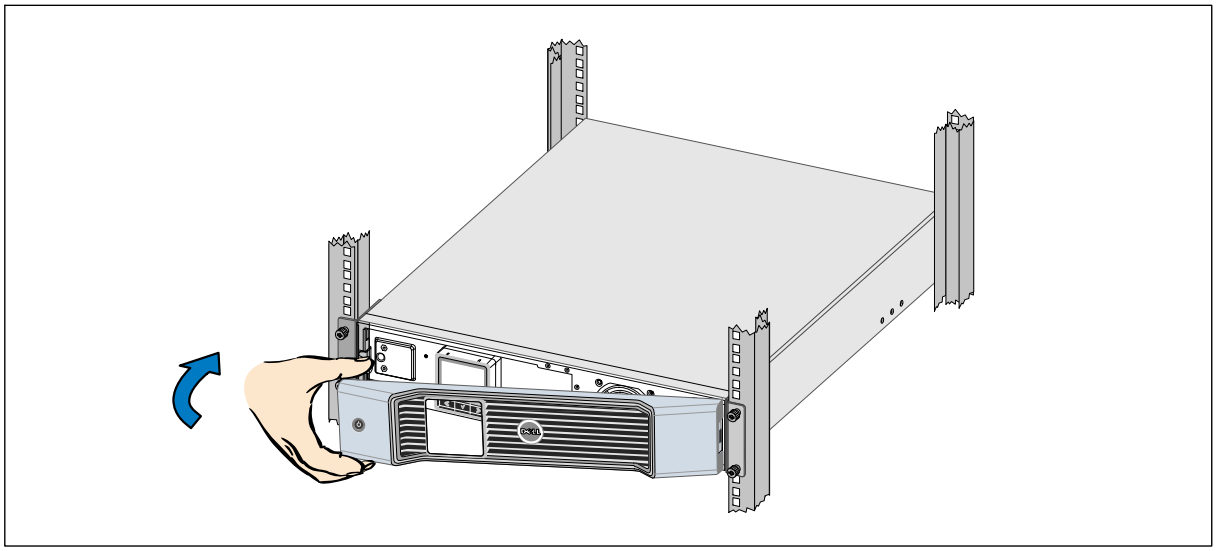

Figure 37. Replacing the UPS Front Cover

Storing the UPS and Batteries

If you store the UPS for a long period, recharge the battery every 6 months by plugging the UPS into a power outlet. The batteries charge to 90% capacity in approximately 4 hours. However, it is recommended that the batteries charge for 48 hours after long-term storage.

Check the battery recharge date on the shipping carton label. If the date has passed and the batteries were never recharged, do not use the UPS. Contact your service representative.

Downloaded from www.Manualslib.com manuals search engine

When to Replace Batteries

When the status summary screen displays the UPS fault icon with the "Service Battery" alarm and the audible alarm sounds continuously, the batteries may need replacing. Contact your service representative to order new batteries.

NOTE: With the user-replaceable battery feature, UPS batteries can be replaced easily without turning the UPS off or disconnecting the load.

Testing Batteries

For a battery test to run:

- The batteries must be fully charged.
- The UPS must be in Normal mode with no active alarms.
- The load must be higher than 10%.

To test the batteries:

1. Plug the UPS into a power outlet for at least 48 hours to charge the batteries.
2. Press the **<** button for one second to go to the main menu selection and scroll down to the Control menu using the **>** button.
3. Press the ✔ button to enter the Control menu.
4. Use the **>** button to scroll to the Battery Test option.
5. Press the ✔ button to start the battery test.

   During the battery test, the UPS transfers to Battery mode and discharges the batteries for 25% of the original expected runtime. The front panel displays "Battery test running" and the percentage of the test completed. The results display on the UPS front panel when complete.

Updating the UPS Firmware

To keep the UPS firmware updated with the latest improvements and benefits, visit **www.dell.com** for updates. You can download the latest firmware version and the instructions for installing it.

Downloaded from www.Manualslib.com manuals search engine

7

Specifications

This chapter provides the following specifications:

- Model list
- Dimensions and weights
- Electrical input and output
- Environmental and safety
- Battery
- UPS block diagram

Table 10. Model List

	100/120V Models	208V Model	230V Models
UPS Models	1000R LV (H919N), 1000W 1920R LV (K792N), 1920W (1500W at 100V) 2700R/T LV (K802N), 2700W (2300W at 100V)	2700R/T HV-US (H945N), 2700W	1000R HV (J718N), 1000W 1920R LV (H928N), 1920W 2700R/T HV (J727N), 2700W
External Battery Module (EBM)	1920R EBM (J735N), 72 Vdc 2700 R/T EBM (K811N), 96 Vdc		

Table 11. Dimensions and Weights

	UPS Models	EBM Model
Dimensions (W × H × D)	1000W: 438.0 × 84.5 × 483.0 mm (17.2″ × 3.3″ × 23.3″) - 2U 1920/1500W: 438.0 × 84.5 × 593.0 mm (17.2″ × 3.3″ × 23.3″) - 2U 2700/2300W: 438.0 × 127.0 × 541.0 mm (17.2″ × 5.0″ × 21.3″) - 3U	1920–2700W: 438.0 × 84.5 × 593.0 mm (17.2″ × 3.3″ × 23.3″) - 2U
Weights	1000W: 19.0 kg (41.8 lb) 1920/1500W: 31.0 kg (68.34 lb) 2700/2300W: 41.0 kg (90.38 lb)	1920–2700W: 54.0 kg (118.9 lb)

Downloaded from www.Manualslib.com manuals search engine

Table 12. Electrical Input

	100/120V Models	208V Models	230V Models
Nominal Voltage	100/120V	208V	230V
Voltage Range	84–150V auto-sensing	160–278V auto-sensing	160–286V auto-sensing
Nominal Frequency	50/60 Hz auto-sensing, ±3 Hz		
Efficiency (Normal mode)	>95%		
Noise Filtering	Full-time EMI/RFI filtering		
Connections	1000W: IEC 320-C14 input connector, 15A 1920/1500W: IEC 320-C20 input connector, 20A 2700/2300W: 2m, L5-30P attached power cord	2700W: IEC 320-C20 input connector, 16A	1000W: IEC 320-C14 input connector, 10A 1920W: IEC 320-C14 input connector, 10A 2700W: IEC 320-C20 input connector, 16A

Table 13. Electrical Output

	100/120V Models	208V Models	230V Models
Power Levels (rated at nominal inputs)	1000W 1920/1500W 2700/2300W	2700W	1000W 1920W 2700W
Regulation (Normal mode)	100V: 92–108V 110V: 100–121V 120V: 106–132V	200V: 180–220V 208V: 184–228V	220V: 198–243 230V: 208–253V 240V: 216–264V
Regulation (Battery mode), Nominal Voltage ±5%	Same as line mode		
Voltage Waveform	Sine wave		
Output Receptacles	1000W: (4) 5-15R, 15A; (2) IEC 320-C13, 15/10A 1920/1500W: (6) 5-15/5-20R, 20A; (2) IEC 320-C19, 20/16A; (2) IEC 320-C13, 15/10A 2700/2300W: (1) L5-20R, 20A; (2) 5-15/5-20R, 20A; (2) IEC 320-C19, 20/16A; (2) IEC 320-C13, 15/10A	2700W: (2) L6-30R, 20A; (2) IEC 320-C19, 20A; (2) IEC 320-C13, 15/10A	1000W: (4) IEC 320-C13, 15/10A; (2) IEC 320-C13, 15/10A 1920W: (2) IEC 320-C19, 20/16A; (6) IEC 320-C13, 15/10A; (2) IEC 320-C13, 15/10A 2700W: (2) IEC 320-C19, 20/16A; (6) IEC 320-C13, 15/10A; (2) IEC 320-C13, 15/10A

Downloaded from www.Manualslib.com manuals search engine

Table 14. Environmental and Safety

	100/120V Models	208V Models	230V Models
Operating Temperature	Up to 1,500 meters: 0°C to 40°C (32°F to 104°F) Above 1,500 meters: 0°C to 35°C (32°F to 95°F)		
Transit/Storage Temperature	-15°C to 60°C (5°F to 140°F)		
Relative Humidity	0–95% noncondensing		
Operating Altitude	Up to 3,048 meters (0–10,000 ft) above sea level		
Audible Noise	Normal mode: less than 40 dBA typical Battery mode: less than 50 dBA typical		
Fan Speed	Off: when the UPS is in Standby mode or there is no load Low speed: when the load is < 80% High speed: when the load is >80% or the UPS is in Battery mode		
Surge Suppression	ANSI/IEEE C62.41; 2002 Category B		
Safety Conformance	UL 1778 4th Edition CSA C22.2, No. 107.3		UL 1778 4th Edition; CSA C22.2, No. 107.3; IEC/EN 62040-1-1; IEC/EN 60950-1
Agency Markings	UL, cUL, NOM/NYCE	UL, cUL	UL, cUL, CE, GS, GOST, BSMI, S-MARK, KC, CQC, NRCS, SIRIM
EMC	FCC, VCCI, ICES-003, BSMI	FCC, VCCI	CE, BSMI, CQC, C-tick

Downloaded from www.Manualslib.com manuals search engine

Table 15. Battery

Configuration	1000W: (3) 12V, 9 Ah internal batteries (no EBM) 1920/1500W: (6) 12V, 9 Ah internal batteries; (12) 12V, 9 Ah EBM 2700/2300W: (8) 12V, 9 Ah internal batteries; (16) 12V, 9 Ah EBM
Voltage	1000W: 36 Vdc internal (no EBM) 1920/1500W: 72 Vdc internal; 72 Vdc EBM 2700/2300W: 96 Vdc internal; 96 Vdc EBM
Fuses	Internal batteries: (2) 30A fuses EBM: (4) 30A fuses
Type	Sealed, maintenance-free, valve-regulated, lead-acid
Charging	Approximately 4 hours to 90% usable capacity at nominal line and no supplementary power supply load
Monitoring	Advanced monitoring for earlier failure detection and warning
Battery Runtimes*	Internal batteries: 5 minutes at full load/14 minutes at half load 1920/1500W with one EBM: 19 minutes at full load/46 minutes at half load 2700/2300W with one EBM: 19 minutes at full load/45 minutes at half load

*Battery runtimes are approximate and vary depending on the load configuration and battery charge.

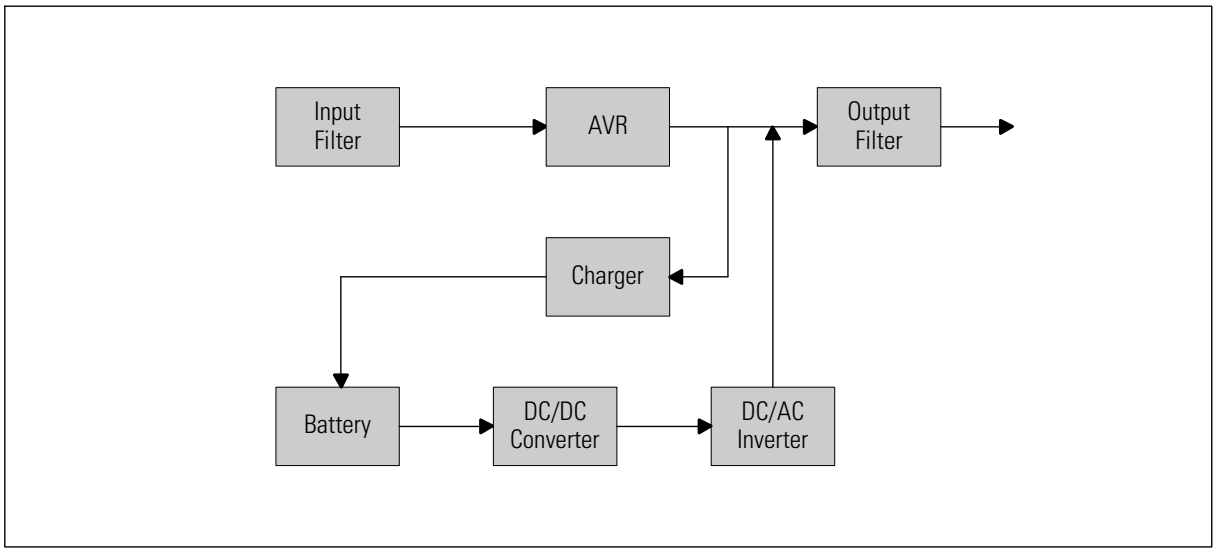

Figure 38. Line-Interactive UPS Block Diagram

Downloaded from www.Manualslib.com manuals search engine

8

Troubleshooting

The Dell Line-Interactive Rack UPS is designed for durable, automatic operation and issues alarms to alert you whenever potential operating problems occur. Usually the alarms shown by the control panel do not mean that the output power is affected. Instead, they are preventive alarms intended to alert the user. Active alarms and active notices are accompanied by an audible buzzer.

Accessing Alarms and Conditions

The control panel provides troubleshooting information from two main menus:

- **UPS Status menu:** access to all active alarms
- **Event Log menu:** access to the most recent 50 events, which may include active and closed alarms

UPS Status Menu

From the UPS Status menu, you can access the following screens for troubleshooting information:

- **Status summary screen:** The status summary screen provides information on both mode and load. When there is a critical alarm, the status summary screen changes from its normal white text on a blue background to dark amber text on an amber background.
- **Notice or alarm screens:** A separate screen appears for each active notice or alarm. If there are no active alarms or notices, the display reads "No Active Alarms."
- **Battery status screen:** The battery status screen indicates the battery charge mode, the percent the battery is charged, and the runtime with the present load level.

NOTE: When an alarm is active, the control panel automatically displays an active alarm screen unless the screen lock is enabled by the user.

To access troubleshooting information using the UPS Status menu:

1 Press the < button for one second to go to the main menu selection.

2 Press the ✔ button to access the UPS Status menu.

3 Press the > button to access the UPS status summary screen.

The UPS status summary screen provides load information. The status icon indicates the UPS operating mode (see Table 4 on page 42).

4 Use the > button to scroll through the active notice and active alarm screens.

5 After scrolling through all alarms, press the > button to access the Battery Status screen.

Downloaded from www.Manualslib.com manuals search engine

Event Log Menu

From the Event Log menu, you can access the last 50 events, which includes events, notices, and alarms, arranged from newest to oldest.

Events are silent conditions that are recorded in the Event Log as status information, such as “Clock Set Done.” Events do not require a response.

Notices and alarms are records of when events occurred and, if applicable, when they were cleared.

- Notices, including active notices, are recorded in the Event Log. Active notices, such as “UPS on Battery,” are announced by an intermittent beep. Notices do not normally require a response.
- Alarms, including active alarms, are recorded in the Event Log. Active alarms are announced by an intermittent beep. Examples are “Output Overload” and “Heatsink Overtemperature.” Active alarms require a response.

The Main Status Menu displays by default. To access troubleshooting information using the Event Log menu:

1. Press the **<** button for one second to go to the main menu selection and scroll down to the Event Log menu using the **>** button.
2. Click the ✔ button to enter the Event Log list.
3. Scroll through the listed events, notices, and alarms using the **>** or **<** button.

Typical Alarms and Conditions

Table 16 describes typical alarms and conditions.

Table 16. Typical Alarms and Conditions

Alarm or Condition	Possible Cause	Action
The UPS does not provide or indicate the expected backup time.	The batteries need charging or service.	Apply utility power for 48 hours to charge the batteries. If the condition persists, contact your service representative.
Power is not available at the UPS output receptacles.	The UPS is in Standby mode.	Supply power to the connected equipment by pressing the On/Off button until the front panel displays the UPS status summary screen.
The UPS does not start. (The LCD is off.)	Power is not connected.	Check the power cord connections. Also ensure that the battery is plugged in.
The UPS operates normally, but some or all of the protected equipment is not on.	The equipment is not connected correctly to the UPS.	Verify that the equipment is plugged into the UPS receptacles. Also verify that the load segment is on.

Downloaded from www.Manualslib.com manuals search engine

Table 16. Typical Alarms and Conditions (continued)

Alarm or Condition	Possible Cause	Action
Battery test did not run or was interrupted.	One of the conditions listed in "Running Automatic Battery Tests" on page 55 was not present.	Resolve the condition, then restart the test.
UPS on Battery (Notice 168) Intermittent Alarm	A utility failure has occurred and the UPS is in Battery mode.	The UPS is powering the equipment with battery power. Prepare your equipment for shutdown.
Battery Disconnected (Alarm 199) Continuous Alarm	The UPS does not recognize the internal batteries.	If the condition persists, contact your service representative.
	Battery voltage is lower than the batteries disconnected level defined for this UPS. This may be due to a blown fuse, intermittent battery connection, or battery cable being disconnected.	Verify that all batteries are properly connected. If the condition persists, contact your service representative.
Low Battery Warning (Alarm 56) Continuous Alarm	Battery time remaining or battery capacity is lower than the battery low warning level defined for this UPS.	This warning is approximate. The actual time to shutdown may vary depending on the UPS load and presence of an External Battery Module (EBM).
Shutdown Imminent (Alarm 55) Continuous Alarm	Communication to external devices stops because the UPS has entered a state where it may abruptly stop operating without further notice unless utility returns.	The alarm is issued when the battery time remaining reaches zero. All connected devices should have already shut down gracefully.
Battery Test Failed (Alarm 191) Intermittent Alarm	A weak battery string was detected during the last battery test.	This is a warning notice. Dell recommends that you replace the batteries soon.
Service Battery (Alarm 149) Continuous Alarm	A faulted battery string has been detected and as a result, the charger is disabled.	Contact your service representative.
Utility Not Present (Alarm 59) Intermittent Alarm	Utility level has fallen below the Utility Not Present threshold (typically <25 to 50V).	The UPS transfers to Battery mode if supporting the load. The UPS shuts down if it is not supporting the load.

Downloaded from www.Manualslib.com manuals search engine

Table 16. Typical Alarms and Conditions (continued)

Alarm or Condition	Possible Cause	Action
Input AC Over Voltage (Alarm 6) Intermittent Alarm	Utility voltage exceeds the maximum operating range.	The UPS transfers to Battery mode if supporting load.
Input AC Under Voltage (Alarm 7) Intermittent Alarm	Utility voltage is below the minimum operating range.	The UPS transfers to Battery mode if supporting load.
Input Under/Over Frequency (Alarm 8) Intermittent Alarm	The utility frequency is out of usable frequency range.	The UPS transfers to Battery mode if supporting load.
Site Wiring Problem (Alarm 194) Continuous Alarm	An alarm triggers when the difference between ground and neutral voltage is >15V.	Have a qualified electrician correct the wiring problem. If the UPS is not wired with a neutral wire, Site Fault should be disabled in the Settings menu (see page 46).
Remote Emergency Power Off (Alarm 12) Continuous Alarm	The external contacts in the rear of the UPS are configured for REPO operation and they have been activated.	The UPS de-energizes the load and enters Standby mode. See "Installing Remote Emergency Power-off" on page 30 for more information.
Output Overload (Alarm 25) Continuous Alarm	The load level is at or has exceeded the configurable threshold limit for a Level 1 Overload condition.	The UPS can support the load indefinitely at this load level. The alarm clears when the load drops below 5% of the set point.
Output Overload Level 2 (Alarm 159) Continuous Alarm	The load level is >101% and <110% of the UPS rating.	Remove some of the equipment from the UPS. The UPS continues to operate, but transfers to Fault mode in two minutes. The alarm clears when the load drops below 5% of the set point.
Output Overload Level 3 (Alarm 162) Continuous Alarm	The load is >110% of the UPS rating.	Remove some of the equipment from the UPS. The UPS continues to operate, but transfers to Fault mode in 300 ms to one second. The alarm clears when the load drops below 5% of the set point.
Battery DC Over Voltage (Alarm 68) Continuous Alarm	Battery voltage levels have exceeded the maximum allowable limits.	The UPS turns off the charger until the next power recycle. Contact your service representative.

Downloaded from www.Manualslib.com manuals search engine

Table 16. Typical Alarms and Conditions (continued)

Alarm or Condition	Possible Cause	Action
Charger Failure (Alarm 34) Continuous Alarm	A battery charger fault has been detected.	The UPS turns off the charger until the next power recycle. Contact your service representative.
Output Short Circuit (Alarm 58) Continuous Alarm	The UPS has detected an abnormally low impedance placed on its output and considers it a short circuit.	The UPS shuts down after five line cycles.
Heatsink Over Temperature (Alarm 73) Continuous Alarm	The UPS has detected that one of its heat sinks has exceeded the maximum defined operating temperature. Possible fan failure.	Ensure that the fans are spinning and that the air intake vents on the UPS are not blocked. Once the maximum temperature is reached, the UPS shuts down.
Fatal EEPROM Fault (Alarm 53) Continuous Alarm	There is EEPROM data corruption due to a failed device or incorrect flash upgrade.	Contact your service representative.
Fan Failure (Alarm 193) Continuous Alarm	The UPS has detected that one or more fans are not functioning properly.	This is an alarm only. Contact your service representative immediately and remove the load.

Silencing the Alarm

Press any button on the control panel to silence the alarm. Check the alarm condition and perform the applicable action to resolve the condition. If any new alarm becomes active, the audible alarm resumes, overriding the previously silenced alarm.

Downloaded from www.Manualslib.com manuals search engine