SuperStack® 3
Switch 4400 Family
Getting Started Guide

Switch 4400 (3C17203)
Switch 4400 (3C17204)
Switch 4400 PWR (3C17205)
Switch 4400 SE (3C17206)
Switch 4400 FX (3C17210)

http://www.3com.com/

Part No. DUA1720-3AAA09
Published July 2005

3Com Corporation
350 Campus Drive
Marlborough,
MA 01752-3064

Copyright © 2001, 2002, 2003, 2004, 2005 3Com Corporation. All rights reserved. No part of this documentation may be reproduced in any form or by any means or used to make any derivative work (such as translation, transformation, or adaptation) without written permission from 3Com Corporation.

3Com Corporation reserves the right to revise this documentation and to make changes in content from time to time without obligation on the part of 3Com Corporation to provide notification of such revision or change.

3Com Corporation provides this documentation without warranty, term, or condition of any kind, either implied or expressed, including, but not limited to, the implied warranties, terms or conditions of merchantability, satisfactory quality, and fitness for a particular purpose. 3Com may make improvements or changes in the product(s) and/or the program(s) described in this documentation at any time.

If there is any software on removable media described in this documentation, it is furnished under a license agreement included with the product as a separate document, in the hard copy documentation, or on the removable media in a directory file named LICENSE.TXT or !LICENSE.TXT. If you are unable to locate a copy, please contact 3Com and a copy will be provided to you.

UNITED STATES GOVERNMENT LEGEND

If you are a United States government agency, then this documentation and the software described herein are provided to you subject to the following:

All technical data and computer software are commercial in nature and developed solely at private expense. Software is delivered as "Commercial Computer Software" as defined in DFARS 252.227-7014 (June 1995) or as a "commercial item" as defined in FAR 2.101(a) and as such is provided with only such rights as are provided in 3Com's standard commercial license for the Software. Technical data is provided with limited rights only as provided in DFAR 252.227-7015 (Nov 1995) or FAR 52.227-14 (June 1987), whichever is applicable. You agree not to remove or deface any portion of any legend provided on any licensed program or documentation contained in, or delivered to you in conjunction with, this User Guide.

Unless otherwise indicated, 3Com registered trademarks are registered in the United States and may or may not be registered in other countries.

3Com, the 3Com logo and SuperStack are registered trademarks of 3Com Corporation.

Intel and Pentium are registered trademarks of Intel Corporation. Microsoft, MS-DOS, Windows, and Windows NT are registered trademarks of Microsoft Corporation. Novell and NetWare are registered trademarks of Novell, Inc. UNIX is a registered trademark in the United States and other countries, licensed exclusively through X/Open Company, Ltd.

IEEE and 802 are registered trademarks of the Institute of Electrical and Electronics Engineers, Inc.

Netscape Navigator is a registered trademark of Netscape Communications.

JavaScript is a trademark of Sun Microsystems.

All other company and product names may be trademarks of the respective companies with which they are associated.

ENVIRONMENTAL STATEMENT

It is the policy of 3Com Corporation to be environmentally-friendly in all operations. To uphold our policy, we are committed to:

Establishing environmental performance standards that comply with national legislation and regulations.

Conserving energy, materials and natural resources in all operations.

Reducing the waste generated by all operations. Ensuring that all waste conforms to recognized environmental standards. Maximizing the recyclable and reusable content of all products.

Ensuring that all products can be recycled, reused and disposed of safely.

Ensuring that all products are labelled according to recognized environmental standards.

Improving our environmental record on a continual basis.

End of Life Statement

3Com processes allow for the recovery, reclamation and safe disposal of all end-of-life electronic components.

Regulated Materials Statement

3Com products do not contain any hazardous or ozone-depleting material.

Environmental Statement about the Documentation

The documentation for this product is printed on paper that comes from sustainable, managed forests; it is fully biodegradable and recyclable, and is completely chlorine-free. The varnish is environmentally-friendly, and the inks are vegetable-based with a low heavy-metal content.

ENCRYPTION

This product contains encryption and may require U.S. and/or local government authorization prior to export or import to another country.

CONTENTS

ABOUT THIS GUIDE

Before You Start 7
- Release Notes 7
- About Your CD-ROM 8

Conventions 8
Related Documentation 9
- Accessing Online Documentation 10

Documentation Comments 10

1 INTRODUCING THE SUPERSTACK 3 SWITCH 4400

About the Switch 4400 14
- Summary of Hardware Features 14

Switch 4400 — Front View Detail 15
- 10BASE-T/ 100BASE-TX Ports 16
- 100BASE-FX Ports 16
- LEDs 17

Switch 4400 — Rear View Detail 19
- Power Socket 19
- Redundant Power System Socket 19
- Console Port 19
- Expansion Module Slots 19

Default Settings 20

2 INSTALLING THE SWITCH

Package Contents 24
Choosing a Suitable Site 24
Rack-mounting 25
Placing Units On Top of Each Other 27
Stacking Units 27
- How To Stack Units 27

Rules For Stacking Units 28
The Power-up Sequence 30
Powering-up the Switch 4400 30
Checking for Correct Operation of LEDs 30
Connecting a Redundant Power System 30
Using Power over Ethernet 31
Choosing the Correct Cables (Switch 4400, 4400 SE and 4400 PWR) 31
Choosing the Correct Cables (Switch 4400 FX) 32

3 SETTING UP FOR MANAGEMENT

Setting Up Overview 34
IP Configuration 35
Preparing for Management 36
Manually Configuring IP Information 37
Connecting to a Front Panel Port 37
Connecting to the Console Port 40
Viewing Automatically Configured IP Information 44
Using 3Com Network Director 44
Connecting to the Console Port 44
Methods of Managing a Switch 47
Command Line Interface Management 47
Command Line Interface Management using SSH 48
Web Interface Management 48
SNMP Management 48
Setting Up Command Line Interface Management 49
CLI Management via the Console Port 49
CLI Management over the Network 49
Setting Up Command Line Interface Management using SSH 50
Setting Up Web Interface Management 51
Pre-requisites 51
Web Management Over the Network 52
Setting Up SNMP Management 52
Pre-requisites 53
Setting Up SNMP 53
Default Users and Passwords 54
Changing Default Passwords 55

4 PROBLEM SOLVING

Solving Problems Indicated by LEDs 58
Solving Hardware Problems 59
Solving Communication Problems 61
Solving Software Upgrade Problems 63

A SAFETY INFORMATION

Power Cord Set — Japan 66
Important Safety Information 66
L'information de Sécurité Importante 68
Wichtige Sicherheitsinformationen 70
Información de seguridad importante 72
Importanti Informazioni di Sicurezza 75
Ważne informacje o zabezpieczeniach 77

B PIN-OUTS

Null Modem Cable 81
PC-AT Serial Cable 81
Modem Cable 82
RJ-45 Pin Assignments 82

C TECHNICAL SPECIFICATIONS

Switch 4400 (24-port) and Switch 4400 SE 85
Switch 4400 PWR (24-port) 87
Switch 4400 (48-port) 89
Switch 4400 FX 91

D OBTAINING SUPPORT FOR YOUR PRODUCT

Register Your Product 93
Purchase Value-Added Services 93
Troubleshoot Online 94
Access Software Downloads 94
Telephone Technical Support and Repair 94
Contact Us 95

INDEX

REGULATORY NOTICES

About This Guide

This guide provides all the information you need to install and use the following switches in their default state:

- SuperStack® 3 Switch 4400 (3C17203)
- SuperStack® 3 Switch 4400 (3C17204)
- SuperStack® 3 Switch 4400 PWR (3C17205)
- SuperStack® 3 Switch 4400 SE (3C17206)
- SuperStack® 3 Switch 4400 FX (3C17210)

All procedures described in this guide apply to all models except where stated.

The guide is intended for use by network administrators who are responsible for installing and setting up network equipment; consequently, it assumes a basic working knowledge of LANs (Local Area Networks).

Before You Start

This section contains information about the documents and CD-ROM that accompany your Switch 4400.

Release Notes

The Release Notes provide important information about the current software release, including new features, modifications, and known problems. You should read the Release Notes before installing the Switch in your network.

If the information in the Release Notes differ from the information in this guide, follow the instructions in the Release Notes.

About Your CD-ROM

The CD-ROM contains the following:

- Online documentation for the Switch 4400 — refer to Related Documentation on page 9 for details.
- A number of other useful applications.

Most user guides and release notes are available in Adobe Acrobat Reader Portable Document Format (PDF) or HTML on the 3Com World Wide Web site:

http://www.3com.com/

Conventions

Table 1 and Table 2 list conventions that are used throughout this guide.

Table 1 Notice Icons

Icon	Notice Type	Description
	Information note	Information that describes important features or instructions
	Caution	Information that alerts you to potential loss of data or potential damage to an application, system, or device
	Warning	Information that alerts you to potential personal injury

Table 2 Text Conventions

Convention	Description
`Screen displays`	This typeface represents information as it appears on the screen.
`Syntax`	The word "syntax" means that you must evaluate the syntax provided and then supply the appropriate values for the placeholders that appear in angle brackets. Example: To change your password, use the following syntax: `system password <password>` In this example, you must supply a password for <password>.
`Commands`	The word "command" means that you must enter the command exactly as shown and then press Return or Enter. Commands appear in bold. Example: To display port information, enter the following command: **`bridge port detail`**
The words "enter" and "type"	When you see the word "enter" in this guide, you must type something, and then press Return or Enter. Do not press Return or Enter when an instruction simply says "type."

Table 2 Text Conventions (continued)

Convention	Description
Keyboard key names	If you must press two or more keys simultaneously, the key names are linked with a plus sign (+). Example: Press Ctrl+Alt+Del
Words in *italics*	Italics are used to: ■ Emphasize a point. ■ Denote a new term at the place where it is defined in the text. ■ Identify menu names, menu commands, and software button names. Examples: From the *Help* menu, select *Contents*. Click *OK*.

Related Documentation

In addition to this guide, each Switch documentation set includes the following:

- *SuperStack 3 Switch Implementation Guide*

  This guide contains information on the features supported by your Switch and how they can be used to optimize your network. It is supplied in PDF format on the CD-ROM that accompanies the Switch.

- *SuperStack 3 Switch Management Quick Reference Guide*

  This guide contains:

  - a list of the features supported by the Switch.
  - a summary of the web interface and command line interface commands for the Switch.

  It is supplied in PDF format on the CD-ROM that accompanies the Switch.

- *SuperStack 3 Switch Management Interface Reference Guide*

  This guide provides detailed information about the web interface and command line interface that enable you to manage the Switch. It is supplied in HTML format on the CD-ROM that accompanies the Switch.

- *Release Notes*

  These notes provide information about the current software release, including new features, modifications, and known problems. The Release Notes are supplied in PDF format on the CD-ROM that accompanies the Switch.

  The latest release notes are available in Adobe Acrobat Reader Portable Document Format (PDF) on the 3Com World Wide Web site:

  `http://www.3com.com/`

There are other publications you may find useful, such as:

- Documentation accompanying the Advanced Redundant Power system.
- Documentation accompanying the Expansion Modules.

Accessing Online Documentation

To access the documentation on the CD-ROM supplied with your Switch, do the following:

1. Insert the CD-ROM into your CD-ROM drive. If your PC has auto-run enabled, a splash screen will be displayed automatically.
2. Select the Documentation section from the contents page.

If the online documentation is to be accessed from a local drive or server, you will need to access the CD-ROM contents via the root directory and copy the files from the CD-ROM to a suitable directory.

- The HTML Reference Guide is stored in the `Docs/reference` directory on the CD-ROM. The documentation is accessed using the contents.htm file.
- The PDF Implementation Guide is stored in the `Docs/implementation` directory of the CD-ROM.

3Com recommends that you copy the `Docs/reference` *directory as a whole to maintain the structure of the files.*

Documentation Comments

Your suggestions are very important to us. They will help make our documentation more useful to you. Please e-mail comments about this document to 3Com at:

pddtechpubs_comments@3com.com

Please include the following information when commenting:

- Document title
- Document part number (on the title page)
- Page number (if appropriate)

Example:

Part Number DUA1720-3AAA09

SuperStack 3 Switch 4400 Family Getting Started Guide

Page 21

Please note that we can only respond to comments and questions about 3Com product documentation at this e-mail address. Questions related to technical support or sales should be directed in the first instance to your network supplier.

1 INTRODUCING THE SUPERSTACK 3 SWITCH 4400

This chapter contains introductory information about the Switch 4400 and how it can be used in your network. It covers summaries of hardware and software features and also the following topics:

- About the Switch 4400
- Switch 4400 — Front View Detail
- Switch 4400 — Rear View Detail
- Default Settings

About the Switch 4400

The Switch 4400 is a stackable 10/100 Mbps Ethernet switch and provides high-performance workgroups with a backbone to server connection. The Switch 4400 allows Cascade, Gigabit Ethernet or Fast Ethernet Fiber connections when expansion modules are installed in the expansion slots on the rear of the unit. You can also add the Switch 4400 to any SuperStack® system as your network grows.

The Switch 4400 PWR (3C17205) supports Power over Ethernet on all front panel ports. If you plug in a compatible (IEEE 802.3af compliant) device, it will be automatically detected and power supplied to it. Power over Ethernet is enabled on each port by default.

The Switch 4400 FX (3C17210) has 24 100BASE-FX MT-RJ ports. These allow easy connection of 100 Mbps fiber-optic links.

Summary of Hardware Features

Table 3 summarizes the hardware features that are supported by the Switch 4400.

Table 3 Hardware features

Feature	Switch 4400
Addresses	■ Up to 8000 supported ■ Up to 64 permanent entries
Auto-negotiation	■ Supported on all ports ■ Auto MDI/MDI-X (not 3C17210)
Forwarding Modes	Store and Forward
Duplex Modes	Half and full duplex on all front panel ports
Smart Auto-sensing	Supported on all ports
Traffic Prioritization	Supported (using the IEEE Std 802.ID, 1998 Edition): 4 queues per port
Power over Ethernet	Supported on all front panel ports (3C17205 only).
Ethernet and Fast Ethernet Ports	Auto-negotiating 10BASE-T/100BASE-TX ports or 100BASE-FX ports (3C17210)
RPS Support	Connects to SuperStack 3 Advanced Redundant Power System (ARPS) (3C16071B)
Mounting	19-inch rack or stand-alone mounting
Stacking	All Switch units in the stack can be managed as a single entity with one IP address

Switch 4400 — Front View Detail

Figure 1 Switch 4400 FX — front view

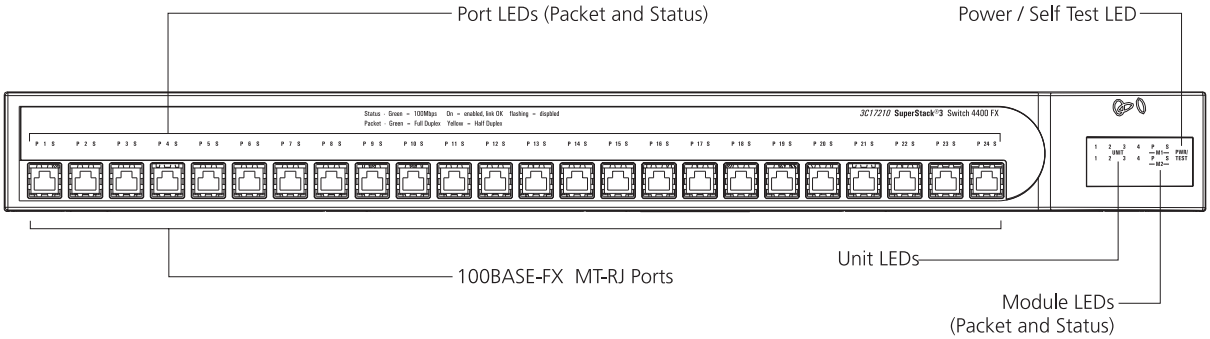

Figure 2 Switch 4400 (24-port) / Switch 4400 SE — front view

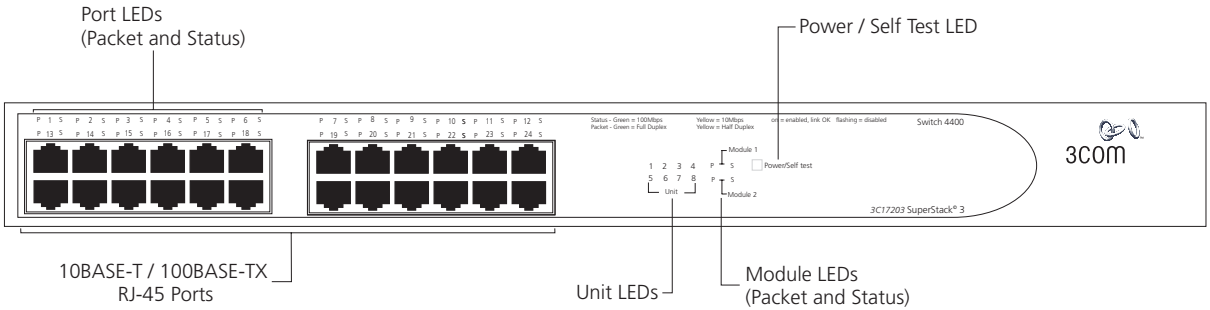

Figure 3 Switch 4400 PWR — front view

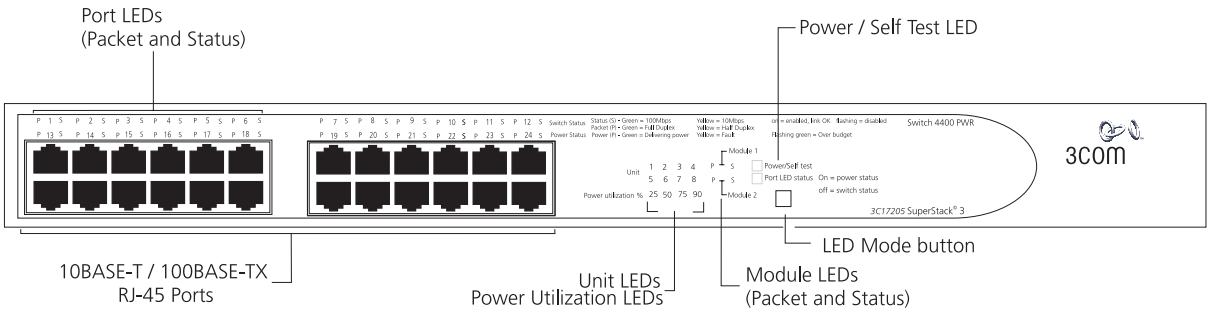

Figure 4 Switch 4400 (48-port) — front view

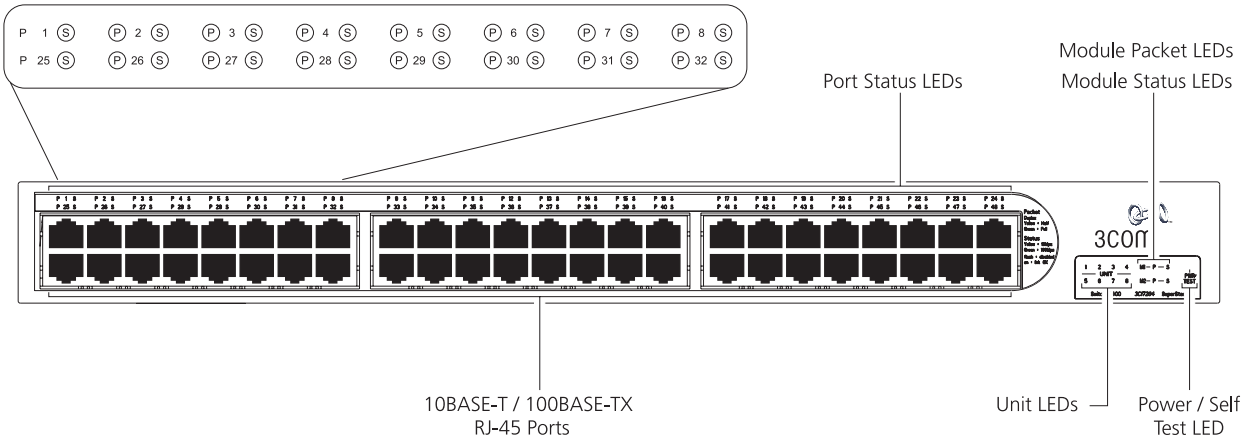

WARNING: *RJ-45 Ports. These are shielded RJ-45 data sockets. They cannot be used as standard traditional telephone sockets, or to connect the unit to a traditional PBX or public telephone network. Only connect RJ-45 data connectors, network telephony systems, or network telephones to these sockets.*

Either shielded or unshielded data cables with shielded or unshielded jacks can be connected to these data sockets.

10BASE-T/ 100BASE-TX Ports

The Switch 4400, 4400 SE and 4400 PWR have 24 or 48 auto-negotiating 10BASE-T/100BASE-TX ports configured as Auto MDIX (cross-over). These ports automatically provide the appropriate connection. Alternatively, you can manually set these ports to 10BASE-T half duplex, 10BASE-T full duplex, 100BASE-TX half duplex or 100BASE-TX full duplex. The maximum segment length is 100 m (328 ft) over Category 5 twisted pair cable.

The 4400 PWR will supply up to 15.4W of power through any of the 24 front panel ports in conformance to the 802.3af specification. The Switch 4400 PWR incorporates a LED Mode Button on the front panel, which when pressed changes the mode of the front panel port LEDs functionality between Switch and Power mode.

100BASE-FX Ports

The Switch 4400 FX has 24 100BASE-FX MT-RJ ports. These are 100 Mbps fiber-optic ports that can use standard multi-mode fiber-optic cable of up to 2 kilometers (1.2 miles). They use the standard MT-RJ

connector that allows both the transmit and the receive fibers to be connected in the same space as an RJ-45 port.

LEDs Table 4 lists LEDs visible on the front of the Switch, and how to read their status according to color. For information on using the LEDs for problem solving, see "Solving Problems Indicated by LEDs" on page 58.

Table 4 LED behavior

LED	Color	Indicates
Power/Self Test LED		
	Green	The Switch is powered-up and operating normally.
	Green flashing	The Switch is either downloading software or is initializing (which includes running a Power On Self Test).
	Yellow	The Switch has failed its Power On Self Test or A port has failed and has been automatically disabled. You can verify this by checking that the Port Status LED is quickly flashing Yellow. If a port fails the Switch passes its Power On Self Test and continues to operate normally.
	Off	The Switch is not receiving power or there is a fault with the Power Supply Unit.
Port LEDs		
Packet	Green	Full duplex packets are being transmitted/received on the port.
	Yellow	Half duplex packets are being transmitted/received on the port.
	Off	No packets are being transmitted/received on the port.
Status	Green	A high speed (100 Mbps) link is present, and the port is enabled.
	Green flashing	A high speed (100 Mbps) link is present, but the port is disabled.
	Yellow	A low speed (10 Mbps) link is present, and the port is enabled (not 4400 FX).
	Yellow flashing	A low speed (10 Mbps) link is present, but the port is disabled (not 4400 FX).
	Yellow flashing (fast)	The port has failed and has been automatically disabled. The Switch passes its Power On Self Test and continues to operate normally even if one or more ports are disabled.
	Off	No link is present.

LED	Color	Indicates
Port LEDs — Power over Ethernet mode (3C17205 only)		
Packet	Green	Power is being delivered to the port.
	Green flashing	Exceeded port power limit (overCurrent MIB state) or unable to supply power due to unit over budget (denyLowPriority MIB state).
	Yellow	Power over Ethernet error, no power supplied on port.
	Off	No power is being delivered.
Status	Yellow flashing	Power over Ethernet POST error on port. Flash rate is 4 Hz
Module LEDs		
	Packet	Refer to the user documentation accompanying the module, if installed.
	Status	Refer to the user documentation accompanying the module, if installed.
	Off	There is no module installed in the expansion module slot.
	Yellow flashing (fast)	The module has failed and has been automatically disabled. The Switch passes its Power On Self Test and continues to operate normally even if one or more modules are disabled.
Unit LEDs		
1–8	Green	When the Switch forms a stack with other Switch 4400 units, the LED indicates the position of the unit in the stack and that a link is present. When the Switch is stand-alone and not part of a stack, LED 1 is on.
	Green/Yellow rotational	When a software upgrade is in progress, the LEDs of the unit that is being upgraded ‘rotate’ in an clockwise and anti-clockwise sequence.
	Green flashing	The Switch physically forms a stack with other Switch 4400 units, but cannot be managed as part of that stack until all units have been upgraded to software version 2.0 or later.
	Off	A fault has occurred.
Port LED Status LED (3C17205 only)		
	Green	Port LEDs are operating in power mode
	Yellow flashing	Port LEDs are operating in normal mode. One or more ports has a Power over Ethernet error.
	Off	Port LEDs are operating in normal mode.
Power Utilization LEDs (3C17205 only)		
	Green	4 LEDs showing total power being delivered as a percentage of maximum possible.

Switch 4400 — Rear View Detail

Figure 5 Switch 4400 (all models) — rear view

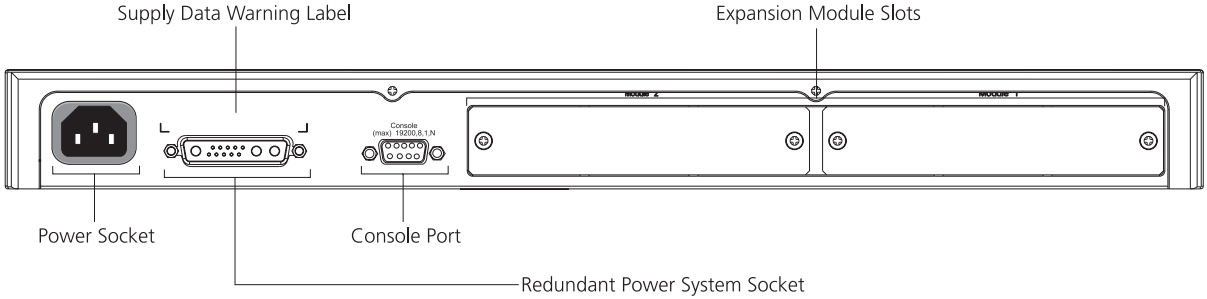

Power Socket

The Switch automatically adjusts its power setting to any supply voltage in the range 90-240 VAC.

Redundant Power System Socket

To protect against internal power supply failure, you can use this socket to connect a Switch 4400 to a SuperStack 3 Advanced Redundant Power System (RPS). See "Connecting a Redundant Power System" on page 30.

Console Port

The console port allows you to connect a terminal and perform remote or local out-of-band management. The console port uses a standard null modem cable and is set to auto-baud, 8 data bits, no parity and 1 stop bit.

Expansion Module Slots

You can use these slots to install Expansion Modules. These allow the Switch to support various forms of connection and add extra functionality to your Switch. For example you can install a Cascade module to enable the Switch to be stacked with other Switches. Please note that Power over Ethernet is not supported on expansion modules on the Switch 4400 PWR (3C17205). Contact your supplier for more information.

WARNING: *When an Expansion Module is not installed, ensure the blanking plate is fitted by tightening all screws with a suitable tool.*

Default Settings

Table 5 shows the default settings for the Switch 4400:

Table 5 Default Settings

Feature	Switch 4400
Automatic IP Configuration	Enabled
Port Status	Enabled
Port Speed	10/100 Mbps ports are auto-negotiated MT-RJ ports (3C17210) are fixed at 100 Mbps
Duplex Mode	All fixed 10BASE-T and 100BASE-TX ports are auto-negotiated 100BASE-FX ports default to full-duplex mode (100 FD) and must be manually set to half-duplex mode (100 HD) if required.
Power over Ethernet	Enabled (3C17205 only)
Flow Control	Disabled
Broadcast Storm Control	Enabled
Virtual LANs (VLANs)	All ports belong to the untagged Default VLAN (VLAN 1) with IEEE Std 802.1Q-1998 learning operational
Management VLAN	VLAN 1
Trusted IP	■ Trusted IP Mode: Disabled ■ Trusted IP Trap: Enabled ■ Max Trusted IP Hosts: 16
Link Aggregation Control Protocol (LACP)	Disabled per port
IP Multicast Filtering	■ Filtering enabled. ■ Querying disabled.
Rapid Spanning Tree Protocol	Enabled
Fast Start	■ Auto on front panel ports ■ Disabled on rear panel port
RMON Alarm	Enabled
Smart Auto-Sensing	Enabled
Webcache Support	Disabled
Traffic Prioritization	All ports prioritize NBX VoIP traffic (LAN and IP). All ports set to “best effort” for all other traffic.
Port Security	Disabled per port

Feature	Switch 4400
Simple Network Time Protocol (SNTP)	Disabled
SSH v2	Enabled for all security levels ■ The switch will generate a unique host key when it is first powered up ■ Client Authentication set to Username/Password ■ Null public keys for each default users ■ Default host key length 1024 ■ Public key ftp sever IP address 0.0.0.0, NULL filename ■ Cipher: DES
Syslog	Disabled
RADA	Disabled ■ Re-authentication time 1800 (30 minutes). ■ Hold-off (re-try) timer 60 (1 minute) ■ Secondary mode (of authentication) disabled
SNMP v1 and v2c	Enabled
SNMP v3	Enabled ■ User: admin, Level: noAuthNoPriv (i.e. no keys) ■ User: monitor and manager: Level: authNoPriv, no default keys set
Local Authentication	Disabled

To make Advanced Traffic Prioritization, RADIUS Based Auto QoS Assignment, and Traffic Shaping available on the SuperStack 3 Switch 4400 SE, upgrade the product to the Switch 4400 SE Enhanced Software Upgrade (3C17207).

If you initialize a Switch unit by selecting *System* > *Control* > *Initialize* in the Web interface or by entering **`system control initialize`** in the Command Line Interface, the following settings are retained to allow you to connect to and manage the Switch:

- IP Address
- Subnet Mask
- Default Router

2 INSTALLING THE SWITCH

This chapter contains the information you need to install and set up the Switch 4400. It covers the following topics:

- Package Contents
- Choosing a Suitable Site
- Rack-mounting
- Placing Units On Top of Each Other
- Stacking Units
- The Power-up Sequence

WARNING: Safety Information. *Before installing or removing any components from the Switch 4400 or carrying out any maintenance procedures, you must read the safety information provided in Appendix A of this guide.*

AVERTISSEMENT: Consignes de sécurité. *Avant d'installer ou d'enlever tout composant du Switch 4400 ou d'entamer une procédure de maintenance, lisez les informations relatives à la sécurité qui se trouvent dans l'Appendice A de ce guide.*

VORSICHT: Sicherheitsinformationen. *Bevor Sie Komponenten aus dem Switch 4400 entfernen oder dem Switch 4400 hinzufuegen oder Instandhaltungsarbeiten verrichten, lesen Sie die Sicherheitsanweisungen, die in Appendix A (Anhang A) in diesem Handbuch aufgefuehrt sind.*

AVVERTENZA: Informazioni di sicurezza. *Prima di installare o rimuovere qualsiasi componente dal Switch 4400 o di eseguire qualsiasi procedura di manutenzione, leggere le informazioni di sicurezza riportate nell'Appendice A della presente guida per l'utente.*

OSTRZEŻENIE: Informacje o zabezpieczeniach*. Przed instalacją lub usunięciem jakichkolwiek elementów z product lub przeprowadzeniem prac konserwacyjnych należy zapoznać się z informacjami o bezpieczeństwie zawartymi w Załączniku A niniejszego podręcznika.*

Package Contents

- Switch unit
- CD-ROM (includes documentation related to your Switch)
- Getting Started Guide (this guide)
- Management Quick Reference Guide
- Release Notes
- Unit Information Labels
- Warranty Information
- Power Cord
- 2 x Mounting brackets
- 4 x Screws
- 4 x Rubber feet

Choosing a Suitable Site

The Switch is suited for use on a desktop, either free standing or mounted in a standard 19-inch equipment rack. Alternatively, the Switch can be mounted in a wiring closet or equipment room, as an aggregator for other Hubs and Switches. A rack-mounting kit containing two mounting brackets is supplied with the Switch.

CAUTION: *Ensure that the ventilation holes are not obstructed.*

When deciding where to position the Switch, ensure that:

- Cabling is located away from:
  - sources of electrical noise such as radios, transmitters and broadband amplifiers.
  - power lines and fluorescent lighting fixtures
- The Switch is accessible and cables can be connected easily.
- Water or moisture cannot enter the case of the Switch.
- Air flow is not restricted around the Switch or through the vents in the side of the Switch. 3Com recommends that you provide a minimum of 25mm (1in.) clearance.
- Air temperature around the Switch does not exceed 40 °C (104 °F).

If the Switch is installed in a 19-inch rack or closed assembly its local air temperature may be greater than room ambient temperature.

- The air is as free from dust as possible.
- The unit is installed in a clean, air conditioned environment.
- No more than eight Switch units are placed on top of one another, if the units are free-standing.
- The Switch is situated away from sources of conductive (electrical) dust, for example laser printers.
- The AC supply used by the Switch is separate to that used by units that generate high levels of AC noise, for example air conditioning units and laser printers.

Rack-mounting

The Switch 4400 is 1U high and will fit in most standard 19-inch racks.

CAUTION: *Disconnect all cables from the Switch before continuing. Remove all self adhesive pads from the underside of the Switch if they have been fitted.*

To rack-mount your Switch:

1. Place the Switch the right way up on a hard flat surface, with the front facing towards you.
2. Locate a mounting bracket over the mounting holes on one side of the Switch, as shown in Figure 6.

Figure 6 Fitting a bracket for rack-mounting

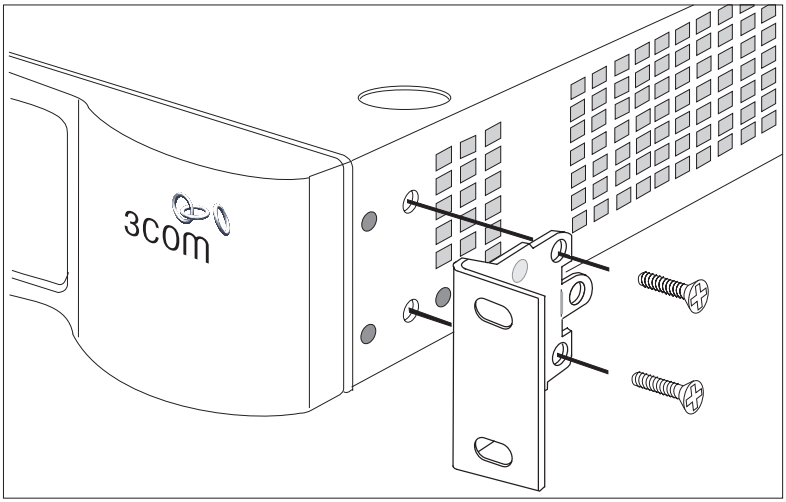

3 Insert the two screws and tighten with a suitable screwdriver.

You must use the screws supplied with the mounting brackets. Damage caused to the unit by using incorrect screws invalidates your warranty.

4 Repeat steps 2 and 3 for the other side of the Switch.

5 Insert the Switch into the 19-inch rack and secure with suitable screws (not provided). Ensure that ventilation holes are not obstructed.

6 Connect network cabling.

7 Finally place a unit information label on the unit in an easily accessible position. The unit information label shows the following:

- The 3Com product name of the Switch
- The 3Com 3C number of the Switch
- The unique MAC address (Ethernet address) of the Switch
- The serial number of the Switch

You may need this information for fault reporting purposes.

Placing Units On Top of Each Other

If the Switch units are free-standing, up to eight units can be placed one on top of the other. If you are mixing a variety of SuperStack® 3 Switch and Hub units, the smaller units must be positioned at the top.

If you are placing Switch units one on top of the other, you must use the self-adhesive rubber pads supplied. Apply the pads to the underside of each Switch, sticking one in the marked area at each corner. Place the Switch units on top of each other, ensuring that the pads of the upper unit line up with the recesses of the lower unit.

Stacking Units

Switch 4400 units can be stacked together and then treated as a single manageable unit with one IP address. Any combination of 24-port and 48-port units is allowed in a single stack.

The SuperStack 3 Switch 4400 SE can only be stacked with non-SE Switches if it has been upgraded using the Switch 4400 SE Enhanced Software Upgrade (3C17207). An upgraded Switch 4400 SE cannot be stacked with a normal Switch 4400 SE.

How To Stack Units

To stack two Switch 4400 units you will need to order the SuperStack 3 Switch Cascade Stacking Kit (3C17227). The kit consists of two Cascade Modules and a Cascade Cable. Both Switches must have an unused expansion slot to allow a Cascade Module to be fitted.

Figure 7 Stacking two Switch 4400 units

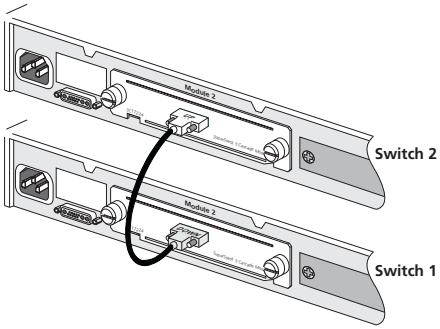

To stack more than two Switch units you will need to order one SuperStack 3 Cascade Extender Kit (3C17228) for each additional unit. This Kit consists of one Cascade Module, one Cascade Cable and one

Cascade Extender Unit. The Cascade Module is installed into the expansion slot at the rear of the Switch and the Cascade Extender Unit plugs into the Cascade Module.

Figure 8 Stacking more than two Switch 4400 units

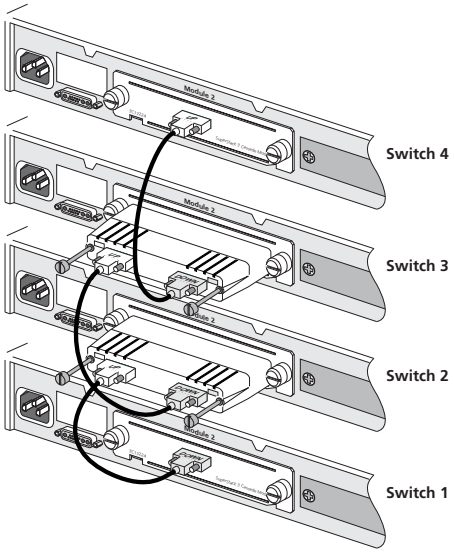

For information on ordering the Cascade Kits contact your supplier. For illustrations and information on how to install the Cascade Kits, refer to the user documentation that accompanies these Kits.

Rules For Stacking Units

This information is also provided in the user documentation that accompanies the Cascade Kits.

- The maximum number of Switch units in a stack is limited to 8. The stack may contain a combination of 24 and 48 port units.
- Only one Cascade Module can be installed per Switch. If Cascade Modules are fitted to both expansion slots in a Switch then both Modules will be disabled.
- Cascade Modules are NOT hot-swappable or hot-insertable. Ensure that the Switch is powered off before inserting or removing a Cascade Module.

- The Cascade Extender Unit is hot-insertable. This allows its host Switch unit to be removed and replaced without disturbing the rest of the stack.
- Only 3Com® Cascade Cables can be used to connect between Cascade Modules/Cascade Extender Units.
- Due to the length of the Cascade Cables, you must insert all of the Cascade Modules into Expansion Module Slot 1 or all of the Cascade Modules into Expansion Module Slot 2 on the Switches.
- It is not possible to stack a Switch 4400, Switch 4400 SE, Switch 4400 PWR or Switch 4400 FX unit with SuperStack II or other SuperStack 3 products using the Cascade Stacking Kit (3C17227) or Cascade Extender Kit (3C17228).
- 3Com strongly recommends that you upgrade all Switch 4400 units (24-port and 48-port) in a stack to the latest software agent.
- 3Com recommends that you initialize a Switch 4400, Switch 4400 SE, Switch 4400 PWR or Switch 4400 FX unit that has previously been used elsewhere in your network before you add it to an existing stack. If you do not initialize the unit, problems may be caused by conflicting Switch configurations.
- When the Switch 4400s are stacked together they are assigned a unit number from bottom-to-top for management purposes. When further Switches are added to the stack, they can be positioned at the bottom of the stack or at the top. Either way, the Switch management software will re-order the Switch unit numbers into a logical order again (from bottom to top).

The Power-up Sequence

The following sections describe how to get your Switch 4400 powered-up and ready for operation.

Powering-up the Switch 4400

Use the following sequence of steps to power-up the Switch.

1. Plug the power cord into the power socket at the rear of the Switch.
2. Plug the other end of the power cord into your power outlet.

   The Switch powers-up and runs through its Power On Self Test (POST), which takes approximately 10 seconds.

Checking for Correct Operation of LEDs

During the Power On Self Test, all ports on the Switch are disabled and the LEDs light in a set sequence.

When the POST has completed, check the Power/Self Test LED to make sure that your Switch is operating correctly. Table 6 shows possible colors for the LED.

Table 6 Power/Self Test LED colors

Color	State
Green	The Switch is powered-up and operating normally.
Yellow	The Switch has failed its Power On Self Test.
Off	The Switch is not receiving power.

If there is evidence of a problem, see "Solving Problems Indicated by LEDs" on page 58.

Connecting a Redundant Power System

You can connect a SuperStack 3 Advanced Redundant Power System (3C16071B) to the Switch. This unit, which is also known as an RPS, is designed to maintain the power to your Switch if a power supply failure occurs.

For normal redundancy, the Switch 4400, Switch 4400 SE, and Switch 4400 FX require one Type 2A Power Module (3C16074A). For full redundancy, the Switch 4400, Switch 4400 SE, and Switch 4400 FX require two type 2A Power Modules combined using a Type 2 Y-Cable. The Switch 4400 PWR (3C17205) requires one Type 3 Power Module (3C16075) for normal redundancy and two Type 3 Power Modules for full redundancy.

CAUTION *The Switch has no ON/OFF switch; the only method of connecting or disconnecting mains power is by connecting or disconnecting the power cord.*

CAUTION: *The Switch can only use a SuperStack Advanced Redundant Power System output.*

Using Power over Ethernet

The Switch 4400 PWR can power any IEEE 802.3af compliant device through any of its front panel ports. For the latest list of supported devices, go to the product page on the 3Com web site:

`http://www.3com.com/`.

For further information about Power Over Ethernet, refer to "Power Management and Control" in the Switch Implementation Guide supplied on the CD-ROM that accompanies your Switch. Power over Ethernet management is available using the web interface or the command line interface (CLI).

Choosing the Correct Cables (Switch 4400, 4400 SE and 4400 PWR)

All of the ports on the front of the Switch 4400, 4400 SE and 4400 PWR are Auto-MDIX, that is they have a cross-over capability. The port can automatically detect whether it needs to operate in MDI or MDIX mode. Therefore you can make a connection to a port with a straight-through (MDI) or a cross-over cable (MDIX).

The Auto-MDIX feature only operates when enabled per port and if auto-negotiation is enabled.

If auto-negotiation is disabled, all the Switch ports are configured as MDIX (cross-over). If you want to make a connection to another MDIX port, you need a *cross-over* cable. Many ports on workstations and servers are configured as MDI (straight-through). If you want to make a connection to an MDI port, you need to use a standard *straight-through* cable. See Table 7.

WARNING: *The 4400 PWR (3C17205) supports Power over Ethernet on all front ports. These ports should only be used for Ethernet wiring within the same building. The Rear Module ports of the Switch 4400 PWR can be used for ethernet wiring between buildings.*

3Com recommends that you use Category 5 twisted pair cable — the maximum segment length for this type of cable is 100 m (328 ft).

Table 7 Cables required to connect the Switch 4400 to other devices if auto-negotiation is disabled

	Cross-over Cable	Straight-through Cable
Switch to Switch (MDIX to MDIX)	✓	×
Switch to Hub (MDIX to MDIX)	✓	×
Switch to PC (NIC) (MDIX to MDI)	×	✓

CAUTION: *If you want to install the Switch using a Category 5E or Category 6 cable, 3Com recommends that you briefly connect the cable to a grounded port before connecting network equipment. If you do not, the cable's Electrostatic Discharge (ESD) may damage the Switch's port.*

You can create a grounded port by connecting all wires at one end of a UTP cable to an earth ground point, and the other end to a female RJ-45 connector located, for example, on a Switch rack or patch panel. The RJ-45 connector is now a grounded port.

Choosing the Correct Cables (Switch 4400 FX)

All of the ports on the front of the Switch 4400 FX are 100BASE-FX MT-RJ multi-mode ports. The MT-RJ port is a small form factor fiber-optic port with the transmit and receive fibers in the same cable. Unlike many fiber-optic systems, only one MT-RJ cable is needed to connect two MT-RJ ports together.

To connect a front-panel port to another 100BASE-FX MT-RJ multi-mode port, or to a patch panel, a single MT-RJ multi-mode pinless jumper cable is required. Since standard MT-RJ cables are cross-over cables, no Auto-MDIX sensing is required. The maximum cable length is 2 kilometers (1.24 miles).

CAUTION: *Do not connect pinned MT-RJ connectors into any port on the Switch 4400 FX as this may damage the unit. The ports have locator pins fitted and are designed for standard (pinless) connectors.*

To connect a front-panel port to a 100BASE-FX single mode port, or to a port that does not have an MT-RJ connector, an adaptor will be required. It is not possible to connect a front panel port to a 1000BASE-FX port.

3 SETTING UP FOR MANAGEMENT

Your Switch can operate in its default state, that is, you can install it and it will work straight away (plug-and-play). However, to make full use of the features offered by the Switch, and to change and monitor the way it works, you have to access the management software that resides on the Switch. This is known as managing the Switch.

Managing the Switch can help you to improve the efficiency of the Switch and therefore the overall performance of your network.

This chapter explains the initial set up of the Switch and the different methods of accessing the management software to manage a Switch. It covers the following topics:

- Setting Up Overview
- Manually Configuring IP Information
- Viewing Automatically Configured IP Information
- Methods of Managing a Switch
- Setting Up Command Line Interface Management
- Setting Up Command Line Interface Management using SSH
- Setting Up Web Interface Management
- Setting Up SNMP Management
- Default Users and Passwords

Setting Up Overview

This section gives an overview of what you need to do to get your Switch set up and ready for management when it is in its default state. The whole setup process is summarized in Figure 9. Detailed procedural steps are contained in the sections that follow. In brief, you need to:

- Configure IP information manually for your Switch or view the automatically configured IP information
- Prepare for your chosen method of management

Figure 9 Initial Switch Setup and Management Flow diagram

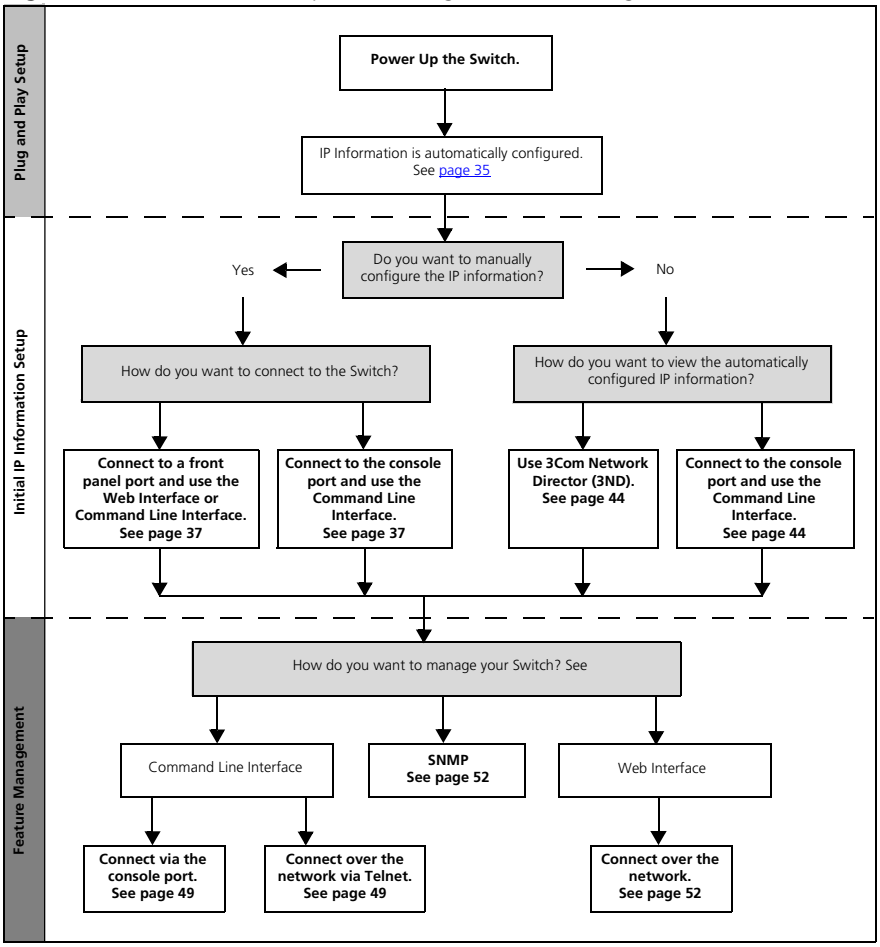

CAUTION: *To protect your Switch from unauthorized access, you must change all three default passwords as soon as possible, even if you do not intend to actively manage your Switch. For more information on default users and changing default passwords, see* "Default Users and Passwords" *on* page 54.

IP Configuration

You can use one of the following methods to allocate IP information to your Switch (essential if you wish to manage your Switch across the network).

Manual IP Configuration

You can choose to configure the IP information yourself. The Switch remembers the information that you enter until you change it again or set the configuration method to Automatic.

You should use the Manual IP configuration method if:

- you do not have a DHCP or BootP server on your network, or
- you want to remove the risk of the IP address ever changing, or
- your DHCP or BootP server does not allow you to allocate static IP addresses. (Static IP addresses are necessary to ensure that the Switch is always allocated the same IP information.)

For most installations, 3Com recommends that you configure the Switch IP information manually. This makes management simpler and more reliable as it is not dependent on a DHCP or BootP server, and eliminates the risk of the IP address changing.

If you wish to manually enter IP information for your Switch, work through the "Manually Configuring IP Information" section on page 37.

Automatic IP Configuration

By default the Switch tries to configure itself with IP information without requesting user intervention. It tries to obtain an IP address from a DHCP or BootP server on the network.

If neither server is found, the Switch will configure itself with its default IP address 169.254.100.100 if it is operating in a standalone mode, and/or no other Switches on the network have this IP address. If this default IP address is already in use on the network then the Switch detects this and configures itself with an IP address in the range 169.254.1.0 to 169.254.254.255.

This process is known as Auto-IP and is the same mechanism used by Windows 98 and Windows 2000. IP addresses configured by Auto-IP are temporary as they cannot be routed but are useful for small networks which are not connected to other networks, or for initial configuration.

However, as soon as a DHCP or BootP server is detected, the Switch will configure itself with the IP address allocated by that server.

When using automatic IP configuration it is important that the IP address of the Switch is static, otherwise you will not know what the IP address is and it will be difficult to manage. Most DHCP and BootP servers allow static IP addresses to be configured so that you know what IP address will be allocated to the Switch. Refer to the documentation that accompanies your DHCP/BootP server.

For a detailed description of how automatic IP configuration operates, please refer to the Implementation Guide on the CD-ROM that accompanies your Switch or on the 3Com Web site.

You should use the automatic IP configuration method if:

- your network uses DHCP or BootP to allocate IP information, or
- flexibility is needed. If the Switch is re-deployed onto a different subnet, it will automatically reconfigure itself with an appropriate IP address, instead of you having to manually reconfigure the Switch.

If you use the automatic IP configuration method, you need to discover the automatically allocated IP information before you can begin management. Work through the "Viewing Automatically Configured IP Information" section on page 44.

Preparing for Management

Once your Switch's initial set up is complete you can set up your chosen management method as described in "Methods of Managing a Switch" on page 47.

For detailed information about the specific web interface operations and command line interface commands and problem solving, refer to the "SuperStack 3 Switch Management Interface Reference Guide" on the CD-ROM that is supplied with the Switch or on the 3Com Web site.

Manually Configuring IP Information

You can manually configure the Switch IP information in the following ways:

- Connecting to a front panel port — Connect a workstation using an Ethernet cable to a front panel port of the Switch. You can then manually enter IP information using the web interface or the command line interface (CLI).
- Connecting to the console port — Connect a workstation using a console cable to the console port of the Switch. You can then manually enter IP information using the command line interface (CLI).

Connecting to a Front Panel Port

To set up your Switch manually you can make a connection to a front panel port. You must do this whilst the Switch is offline, that is, before you connect the Switch to a network.

The procedure described in this section assumes the unit has been powered up in standalone mode and has the default IP address of 169.254.100.100.

Pre-requisites

- A workstation running Windows 95/98/2000, Windows NT or Windows XP.
- A Network Interface Card (NIC).
- A Category 5 twisted pair Ethernet cable with RJ-45 connectors.
- A suitable Web browser — refer to "Choosing a Browser" on page 51.
- You need to have the following so that you can manually set up the Switch with IP information:
  - IP address
  - subnet mask
  - default gateway
  - management VLAN ID, normally set to the default value (1)

Connecting the Workstation to the Switch

1 Connect the workstation to a front panel port using an Ethernet cable as shown in Figure 10.

Figure 10 Connecting a workstation to the Switch via a front panel port

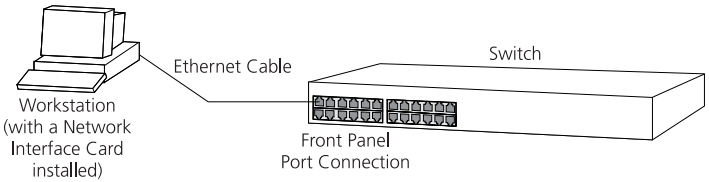

To connect the cable:

a Attach an RJ-45 connector at one end of the Ethernet cable to the Network Interface Card (NIC) in the workstation.

b Connect the RJ-45 connector at the other end of the cable to one of the front panel ports on the Switch.

Do not interconnect the Switch to any other unconfigured Switch.

Configuring the Workstation with IP Information

You need to change the IP address and subnet mask of the workstation that you have connected to the Switch. Make a note of the existing settings so you can return to them later. Change the workstation to the following settings:

- IP address — **169.254.100.99**
- Subnet mask — **255.255.0.0**

Setting Up the Switch with IP Information

You are now ready to manually set up the Switch with IP information. You can do this using the Web interface or the command line interface (CLI) via telnet.

Using the Web Interface

1 Power-up the Switch. This takes approximately one minute.

2 Open a suitable Web browser and enter **169.254.100.100** in the *Location Address* field. This is the default IP address that is automatically assigned to an offline unit.

If there is no response, wait for one minute then re-enter the default IP address.

3 At the login and password prompts, enter **`admin`** as your user name and press Return at the password prompt (default user name and password). If you have logged on correctly, a set of Getting Started pages are displayed.

4 The Getting Started pages allow you to enter basic setup information for the Switch. Select **`Manual`** and then enter the IP address, subnet mask, and default gateway that you want the Switch to use when it is connected to the network. The final page displays a summary of the information entered.

The initial set up of your Switch is now complete and the Switch is ready for you to set up your chosen management method. See "Methods of Managing a Switch" on page 47.

Using Command Line Interface via Telnet

1 To start a Telnet session to the unit, click *Start* in Microsoft Windows 95/98/2000/NT/XP.

   a Click *Run*.

   b In the dialogue box that appears type the default IP address of the unit, that is: **`Telnet 169.254.100.100`**

   c Click *OK*.

2 Press *Enter* to open a login prompt.

If the login prompt does not begin immediately, press Return a few times until it starts.

3 At the login and password prompts, enter **`admin`** as your user name and press Return at the password prompt. If you have logged on correctly, the top-level menu of the command line interface is displayed as shown in the example in Figure 11.

Figure 11 Example top-level command line interface menu

```
Menu options: --------------3Com SuperStack 3 Switch 4xxx---------------
 bridge              - Administer bridge-wide parameters
 feature             - Administer system features
 gettingStarted      - Basic device configuration
 logout              - Logout of the Command Line Interface
 physicalInterface   - Administer physical interfaces
 protocol            - Administer protocols
 security            - Administer security
 system              - Administer system-level functions
 trafficManagement   - Administer traffic management

Type  ? for help
---------------------------------------- (2)---------------------------
Select menu option: ▌
```

4 At the Select menu option prompt you can either:

- enter the **`protocol ip basicConfig`** command. At the `Enter configuration method` prompt enter **`manual`**. The screen prompts you to enter IP information.

or

- enter the **`gettingStarted`** command. At the `Enter configuration method` prompt enter **`manual`**. The screen prompts you to enter IP information.

5 Enter the IP address, subnet mask, and gateway IP address for the Switch. The screen displays a summary of the information entered.

If using the `gettingStarted` command you will then be prompted to enter system information, change passwords, and then given the option to carry out advanced configuration.

The **`protocol ip basicConfig`** *command will prompt you for the management VLAN ID. If the unit is new there is only one VLAN (VLAN 1) to choose from.*

The initial set up of your Switch is now complete and the Switch is ready for you to set up your chosen management method. See "Methods of Managing a Switch" on page 47.

Connecting to the Console Port

To set up your Switch manually you can alternatively make a connection to the console port (this example describes a local connection to the console port, rather than a remote one via a modem). You can do this whilst the Switch is offline, that is, before you connect the Switch to a network, or whilst the Switch is online, that is, connected to a network.

Pre-requisites

- A workstation with terminal emulation software installed, such as Microsoft Hyperterminal. This software allows you to communicate with the Switch via the console port directly, or through a modem.
- Documentation supplied with the terminal emulation software.
- A suitable cable:
  - A standard null modem cable — if you are connecting directly to the console port, or
  - A standard modem cable — if you are connecting to the console port using a modem.

You can find pin-out diagrams for both cables in Appendix B *on* page 81.

- You need to have the following so that you can manually set up the Switch with IP information:
  - IP address
  - subnet mask
  - default gateway
  - management VLAN ID, normally set to the default value (1)

Connecting the Workstation to the Switch

1 Connect the workstation to the console port using a standard null modem cable as shown in Figure 12.

Figure 12 Connecting a workstation to the Switch via the console port

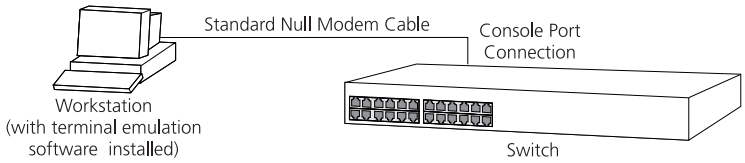

To connect the cable:

a Attach the female connector on the cable to the male connector on the console port of the Switch.

b Tighten the retaining screws on the cable to prevent it from being loosened.

c Connect the other end of the cable to one of the serial ports (also known as a COM port) on your workstation.

2 Open your terminal emulation software and configure the COM port settings to which you have connected the cable. The settings should be set to match the default settings for the Switch, which are:

- 19,200 baud
- 8 data bits
- no parity
- 1 stop bit
- no hardware flow control

Refer to the documentation that accompanies the terminal emulation software for more information.

Setting Up the Switch with IP Information

You are now ready to manually set up the Switch with IP information using the command line interface.

1 The command line interface login sequence begins as soon as the Switch detects a connection to its console port.

If the login prompt does not begin immediately, press Return a few times until it starts.

2 At the login and password prompts, enter **`admin`** as your user name and press Return at the password prompt. If you have logged on correctly, the top-level menu of the command line interface is displayed as shown in the example in Figure 13.

Figure 13 Example top-level command line interface menu

```
Menu options: --------------3Com SuperStack 3 Switch 4xxx---------------
 bridge              - Administer bridge-wide parameters
 feature             - Administer system features
 gettingStarted      - Basic device configuration
 logout              - Logout of the Command Line Interface
 physicalInterface   - Administer physical interfaces
 protocol            - Administer protocols
 security            - Administer security
 system              - Administer system-level functions
 trafficManagement   - Administer traffic management

Type  ? for help
---------------------------------------- (2)---------------------------
Select menu option: ▌
```

3 At the Select menu option prompt you can either:

- enter the **`protocol ip basicConfig`** command. At the `Enter configuration method` prompt enter **`manual`**. The screen prompts you to enter IP information.

or

- enter the **`gettingStarted`** command. At the `Enter configuration method` prompt enter **`manual`**. The screen prompts you to enter IP information.

4 Enter the IP address, subnet mask, and gateway IP address for the Switch. The screen displays a summary of the information entered.

If using the `gettingStarted` command you will then be prompted to enter system information, change passwords, and then given the option to carry out advanced configuration.

The **`protocol ip basicConfig`** *command will prompt you for the management VLAN ID. If the unit is new there is only one VLAN (VLAN 1) to choose from.*

The initial set up of your Switch is now complete and the Switch is ready for you to set up your chosen management method. See "Methods of Managing a Switch" on page 47.

If you do not intend to use the command line interface via the console port to manage the Switch, you can disconnect the serial cable and close the terminal emulator software.

Viewing Automatically Configured IP Information

If you allow the Switch to automatically configure its own IP information you need to discover and view the IP information before you can begin to manage the Switch. You can discover the IP information in two ways:

- Using 3Com Network Director — This application will auto-discover the Switch and display the automatically allocated IP information assigned to the Switch.
- Connecting to the Console Port — Connect a workstation using a console cable to the console port of the Switch. You can then view the IP information automatically assigned to the Switch using the command line interface (CLI).

Using 3Com Network Director

You can use the 3Com Network Director application (available from the 3Com website) to discover the automatically allocated IP information.

1. Connect your Switch to the network.
2. Power-up the Switch and wait for two minutes.
3. Launch 3Com Network Director and run the Auto-discovery wizard.

   3Com Network Director will auto-discover the new Switch and display the IP information that has been automatically allocated to the Switch.

Most DHCP and BootP servers allow static IP addresses to be configured so that you know what IP address the Switch will be given. Refer to the documentation that accompanies your DHCP or BootP server.

If your network does not have a DHCP or BootP server, the workstation running 3Com Network Director must be on the same subnet as the Switch, because Auto-IP addresses are non-routable.

Connecting to the Console Port

Alternatively, you can view the automatically configured IP information via the command line interface (CLI) through a connection to the console port. (This example describes a local connection to the console port, rather than a remote one via a modem.)

Pre-requisites

- A workstation with terminal emulation software installed, such as Microsoft Hyperterminal. This software allows you to communicate with the Switch via the console port directly, or through a modem.
- Documentation supplied with the terminal emulation software.

- A suitable cable:
  - A standard null modem cable — if you are connecting directly to the console port, or
  - A standard modem cable — if you are connecting to the console port using a modem.

You can find pin-out diagrams for both cables in Appendix B *on* page 81.

- A Category 5 twisted pair Ethernet cable with RJ-45 connectors to connect your Switch to the network.

Connecting the Workstation to the Switch

1 Connect the workstation to the console port using a standard null modem cable as shown in Figure 14.

Figure 14 Connecting a workstation to the Switch via the console port

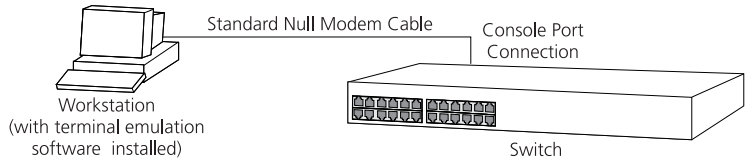

To connect the cable:

a Attach the female connector on the cable to the male connector on the console port of the Switch.

b Tighten the retaining screws on the cable to prevent it from being loosened.

c Connect the other end of the cable to one of the serial ports (also known as a COM port) on your workstation.

2 Open your terminal emulation software and configure the COM port settings to which you have connected the cable. The settings should be set to match the default settings for the Switch, which are:

- 19,200 baud
- 8 data bits
- no parity
- 1 stop bit
- no hardware flow control

Refer to the documentation that accompanies the terminal emulation software for more information.

Viewing IP Information via the Console Port

You are now ready to view the automatically allocated IP information using the command line interface.

1 Connect your Switch to the network using an Ethernet cable. As soon as a network connection is made the Switch begins the automatic IP configuration process.

The automatic IP configuration process usually completes within one minute.

If there is no response from a DHCP server within 30 seconds, the Auto-IP configuration mechanism attempts to allocate the default IP address 169.254.100.100. If this address is not available, it then allocates an IP address in the range of 169.254.x.y (where x is in the range 1 to 254, and y is in the range 0 to 255).

2 The command line interface login sequence begins as soon as the Switch detects a connection to its console port.

If the login prompt does not begin immediately, press Return a few times until it starts.

3 At the login and password prompts, enter **admin** as your user name and press Return at the password prompt. If you have logged on correctly, the top-level menu of the command line interface is displayed as shown in the example in Figure 15.

Figure 15 Example top-level command line interface menu

```
Menu options: --------------3Com SuperStack 3 Switch 4xxx---------------
 bridge             - Administer bridge-wide parameters
 feature            - Administer system features
 gettingStarted     - Basic device configuration
 logout             - Logout of the Command Line Interface
 physicalInterface  - Administer physical interfaces
 protocol           - Administer protocols
 security           - Administer security
 system             - Administer system-level functions
 trafficManagement  - Administer traffic management

Type  ? for help
---------------------------------------- (2)---------------------------
Select menu option: 
```

4 At the Select menu option prompt enter the **protocol ip interface summary** command. At the `Select IP interfaces` prompt enter **all**. A summary of the automatically allocated IP information is displayed. Make a note of the Network IP Address.

The initial set up of your Switch is now complete and the Switch is ready for you to set up your chosen management method. See "Methods of Managing a Switch" on page 47.

If you do not intend to use the command line interface via the console port to manage the Switch, you can logout, disconnect the serial cable and close the terminal emulator software.

Methods of Managing a Switch

Once you have completed the initial set up of your Switch, you can decide how you wish to manage the Switch. You can use one of the following methods:

- Command line interface management
- Command line interface management using SSH
- Web interface management
- SNMP management

Command Line Interface Management

Each Switch has a command line interface (CLI) that allows you to manage the Switch from a workstation, either locally via a console port connection (see Figure 16), or remotely over the network (see Figure 17).

Figure 16 CLI management via the console port

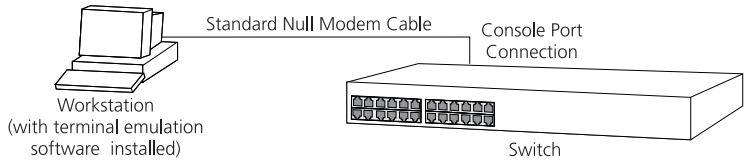

Figure 17 CLI management over the network

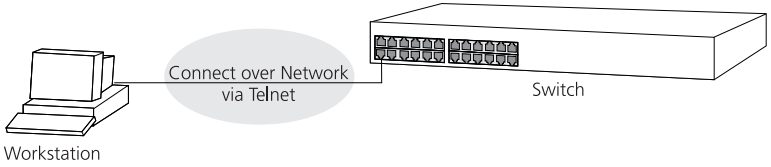

Refer to "Setting Up Command Line Interface Management" on page 49.

Command Line Interface Management using SSH

The Switch 4400 supports Secure Shell version 2 (SSHv2), allowing secure access to the Command Line Interface of the Switch.

If you use SSH to administer your Switch and the network traffic is intercepted, no passwords or configuration information will be visible in the data. To securely adminster the Switch using the Command Line Interface you need a third party SSH client.

Web Interface Management

Each Switch has an internal set of web pages that allow you to manage the Switch using a Web browser remotely over an IP network (see Figure 18).

Figure 18 Web interface management over the network

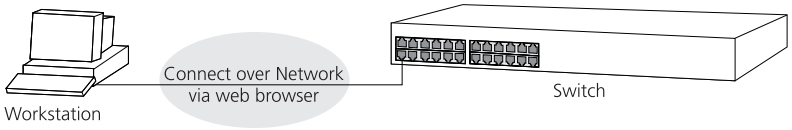

Refer to "Setting Up Web Interface Management" on page 51.

SNMP Management

You can manage a Switch using any network management workstation running the Simple Network Management Protocol (SNMP) as shown in Figure 19. For example, you can use the 3Com Network Director software which is available from the 3Com website.

The Switch 4400 supports SNMPv1, SNMPv2c and SNMPv3.

Figure 19 SNMP management over the network

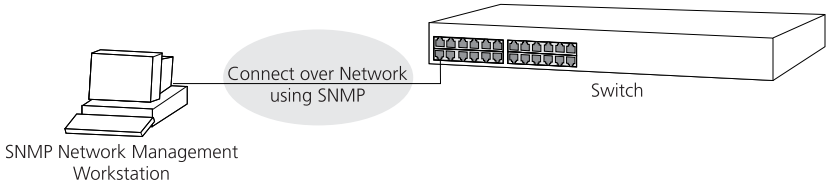

Refer to "Setting Up SNMP Management" on page 52.

Setting Up Command Line Interface Management

This section describes how you can set up command line interface management using a local console port connection or over the network.

CLI Management via the Console Port

To manage a Switch using the command line interface via the local console port connection:

1. Ensure you have connected your workstation to the console port correctly as described in "Connecting to the Console Port" on page 40.
2. Your Switch is now ready to continue being managed and/or configured through the CLI via its console port.

CLI Management over the Network

To manage a Switch using the command line interface over a network using Telnet:

1. Ensure you have already set up the Switch with IP information as described in "Setting Up Overview" on page 34.
2. Check that you have the IP protocol correctly installed on your management workstation. You can check this by trying to browse the World Wide Web. If you can browse, the IP protocol is installed.
3. Check you can communicate with the Switch by entering a **`ping`** command at the DOS prompt in the following format:

   `c:\ ping xxx.xxx.xxx.xxx`
   (where xxx.xxx.xxx.xxx is the IP address of the Switch)

   If you get an error message, check that your IP information has been entered correctly and the Switch is powered up.
4. To open a Telnet session via the DOS prompt, enter the IP address of the Switch that you wish to manage in the following format:

   `>telnet xxx.xxx.xxx.xxx`
   (where xxx.xxx.xxx.xxx is the IP address of the Switch)

   If opening a Telnet session via third party software you will need to enter the IP address in the format suitable for that software.
5. At the login and password prompts, enter **`admin`** as your user name and press Return at the password prompt (or the password of your choice if you have already modified the default passwords).

If the login prompt does not display immediately, press Return a few times until it starts.

6 If you have logged on correctly, the top-level menu of the command line interface for the Switch you wish to manage is displayed as shown in Figure 13 on page 43.

Setting Up Command Line Interface Management using SSH

This section describes how you can set up Command Line Interface management using SSH over a network.

To manage a Switch using the command line interface over a network using SSH:

1 Ensure you have already set up the Switch with IP information as described in "Setting Up Overview" on page 34.

2 Check that you have the IP protocol correctly installed on your management workstation. You can check this by trying to browse the World Wide Web. If you can browse, the IP protocol is installed.

3 Check you can communicate with the Switch by entering a **ping** command at the DOS prompt in the following format:

```
c:\ ping xxx.xxx.xxx.xxx
```

(where xxx.xxx.xxx.xxx is the IP address of the Switch)

If you get an error message, check that your IP information has been entered correctly and the Switch is powered up.

The switch automatically generates a host key pair when it is powered up for the first time, or after any reset to factory defaults. Host key generation may take a while, during which time SSH connections to the switch will be refused.

4 Install an SSH client application on the workstation you want to use to access the switch.

3Com recommends the following SSH clients; PuTTY, OpenSSH and SSH Communications Security Corp Secure Shell.

5 Open an SSH session and access the switch using the switch's IP address and port number.

The first time you connect to the switch the client will ask you to confirm that the host key is correct for the device.

6 The switch and the SSH client will authenticate each other and a secure connection will be established.

7 Enter your usual username and password to access the CLI commands.

For increased security please change the default password when using SSH for the first time.

For further information on generating a host key on your switch and transferring keys to the Switch using TFTP server please refer to Chapter 11 of the "SuperStack 3 Switch Implementation Guide".

Setting Up Web Interface Management

This section describes how you can set up web interface management over the network.

Pre-requisites

- Ensure you have already set up the Switch with IP information as described in "Setting Up Overview" on page 34.
- Ensure that the Switch is connected to the network using a Category 5 twisted pair Ethernet cable with RJ-45 connectors.
- A suitable Web browser.

Choosing a Browser

To display the web interface correctly, use one of the following Web browser and platform combinations:

Table 8 Supported Web Browsers and Platforms

	Windows 95	Windows 98	Windows NT 4	Windows 2000	Windows XP	Solaris 2.6
Netscape 4.76	✓	✗	✗	✗	✗	✓
Netscape 6.2	✗	✓	✓	✓	✓	✗
Netscape 7.0	✗	✓	✓	✓	✓	✗
Internet Explorer 5.5	✓	✓	✓	✓	✓	✗
Internet Explorer 6.0	✗	✓	✓	✓	✓	✗

For the browser to operate the web interface correctly, JavaScript™ and Cascading Style Sheets must be enabled on your browser. These features are enabled on a browser by default. You will only need to enable them if you have changed your browser settings.

To enable style sheets in Netscape Navigator 4.76 on Solaris 2.6, open Netscape Navigator and select *Edit > Preferences > Fonts*. Select the *Use document-specified fonts, including Dynamic Fonts* radio button. You should also set the font sizes as follows:

- Variable Width Font - Size 10.0
- Fixed Width Font - Size 12.0

This ensures that the text spacing is correct. Finally in the *Advanced* category ensure that *Enable Java Script* and *Enable style sheets* are checked.

Web Management Over the Network

To manage a Switch using the web interface over an IP network:

1. Check that you have the IP protocol correctly installed on your management workstation. You can check this by trying to browse the World Wide Web. If you can browse, the IP protocol is installed.
2. Check you can communicate with the Switch by entering a **`ping`** command at the DOS prompt in the following format:

   `c:\ ping xxx.xxx.xxx.xxx`
   (where xxx.xxx.xxx.xxx is the IP address of the Switch)

   If you get an error message, check that your IP information has been entered correctly and the Switch is powered up.
3. Open your web browser and enter the IP address of the Switch that you wish to manage in the URL locator, for example, in the following format:

   `http://xxx.xxx.xxx.xxx`
4. At the login and password prompts, enter **`admin`** as your user name and press Return at the password prompt (or the password of your choice if you have already modified the default passwords).
5. Click on the *Device View* button to display the web management options.

Setting Up SNMP Management

Any network management application running the Simple Network Management Protocol (SNMP) can manage a Switch if:

- The correct Management Information Bases (MIBs) are installed on the management workstation.

- The management workstation is connected to the Switch using a port in the management VLAN. By default, VLAN 1 is the management VLAN containing all ports on the Switch.

You can use the 3Com Network Director application that is available from the 3Com website to provide SNMP management for your Switch. If you use 3Com Network Director it automatically loads the correct MIBs and necessary files onto your workstation.

Pre-requisites

- Documentation supplied with the SNMP network management application software.

Setting Up SNMP

By default, SNMPv1, SNMPv2c and SNMPv3 are enabled and a local engine ID is automatically defined. The local engine ID may be a string specified by the user or a generated default string based on the MAC address of the device.

For detailed descriptions of SNMP CLI commands please refer to the **`system management snmp`** *menu. Please refer to the Management Interface Reference Guide supplied in HTML format on the CD-ROM that accompanies your Switch.*

To configure SNMPv1 and SNMPv2c

1. Set the desired access level (monitor, manager or security).
2. Ensure the user's access level is enabled for SNMPv1/2c.

   The access level is enabled by default.
3. Set the community string for that user.
4. Configure your SNMP manager application to use the community string.

To configure SNMPv3

1. Set the desired access level (monitor, manager or security).
2. Ensure the user's access level is enabled for SNMPv3.

   The access level is enabled by default.
3. Configure SNMPv3 security for the user, setting the authentication protocol, authentication password (if authentication is used), privacy protocol and privacy password (if privacy is used).
4. Configure your SNMP manager application to use the username, with the settings and passwords.

For detailed descriptions of CLI commands for configuring SNMPv3 security for users, please refer to the **`security device user`** *menu. Please refer to the Management Interface Reference Guide supplied in HTML format on the CD-ROM that accompanies your Switch.*

For security reasons, authentication passwords are invalidated if the SNMPv3 engine id is changed.

3Com recommends you use SNMPv3 where possible for increased security.

Default Users and Passwords

If you intend to manage the Switch using the web interface or the command line interface, or to change the default passwords, you need to log in with a valid user name and password. The Switch has three default user names, and each user name has a different password and level of access. These default users are listed in Table 9.

CAUTION: *To protect your Switch from unauthorized access, you must change all three default passwords as soon as possible, even if you do not intend to actively manage your Switch*

Table 9 Default Users

User Name	Default Password	Access Level
monitor	monitor	monitor — the user can view all manageable parameters, except special/security features, but cannot change any manageable parameters
manager	manager	manager — the user can access and change the operational parameters but not special/security features
admin	(no password)	security — the user can access and change all manageable parameters

Use the admin default user name (no password) to login and carry out initial Switch setup.

Table 10 Default SNMP Users

User Name	Access Level	Community String	SNMPv3 Authentication	SNMPv3 Privacy
admin	security	private	-	-
manager	manager	manager	md5	-
monitor	monitor	public	md5	-

Changing Default Passwords

You can change the default passwords using either:

- The **`gettingStarted`** command on the CLI, or
- The **`security device user modify`** command on the CLI, or
- The *Security* > *Device* > *User* > *Modify* operation on the web interface.

*The **`gettingStarted`** option does not allow SNMPv3 security to be specified. You must use the **`security device user modify`** command.*

For more information about default users and passwords, refer to the "Superstack 3 Switch Management Interface Reference Guide" on the Switch CD-ROM.

4 PROBLEM SOLVING

This chapter helps you to diagnose and solve problems you may have with the operation of your Switch. There is also an explanation of IP addressing.

The topics covered are:

- Solving Problems Indicated by LEDs
- Solving Hardware Problems
- Solving Communication Problems
- Solving Software Upgrade Problems

If you experience a problem that is not listed here, it may be included in the Support section of the Superstack 3 Switch Management Interface Reference Guide on the CD-ROM that accompanies your Switch.

For Technical Support information, see Appendix D.

Solving Problems Indicated by LEDs

If the LEDs on the Switch indicate a problem, refer to the list of suggested solutions below.

The Power LED does not light

Check that the power cable is firmly connected to the Switch and to the supply outlet. If the connection is secure and there is still no power, you may have a faulty power cord or an internal fault. Firstly, check the power cord by:

- testing it in another device
- connecting a working power cord to the 'problem' device

then contact your supplier for advice.

On powering-up, the Power/Self Test LED lights yellow

Either:

- The Switch unit has failed its Power On Self Test (POST) because of an internal problem. The fault type will be indicated on the unit LEDs. Contact your supplier for advice.

  or

- A port has failed and has been automatically disabled. You can verify this by checking that the Port Status LED is quickly flashing Yellow. If a port fails the Switch passes its Power On Self Test and continues to operate normally.

A Port Status LED is quickly flashing yellow

The port has failed and has been automatically disabled. The Switch passes its Power On Self Test and continues to operate normally, even if one or more ports are disabled.

A link is connected and yet the Status LED for the port does not light

Check that:

- The Switch and the device at the other end of the link (or cable) are connected securely.
- The devices at both ends of the link are powered-up
- The quality of cable is satisfactory

- Auto-negotiation settings are the same at both ends.

  Auto-negotiation problems will occur with 10BASE-T or 100BASE-T where auto-negotiation is disabled and incorrect cables are being used (cross-over or straight)

  Auto-negotiation problems will occur with fiber if:

  - The Receiver (RX) and Transceiver (TX) cable connectors are swapped
  - Fibers are broken
  - Auto-negotiation differs at either end (a link appears at the 'fixed' end and not at the auto-negotiation end)

The Unit LED is flashing green

The Switch unit physically forms a stack with other Switch 4400 units, but cannot be managed as part of that stack because one or more units have not been upgraded to software version 2.0 or later. You must upgrade each unit in the stack to this software version, which is available on the CD-ROM that accompanies your Switch.

Port LED Status LED is flashing yellow (3C17205 only)

The Switch has a Power over Ethernet error. You must press the LED Mode button to see which ports are affected and to see whether it is a fault or a power budget issue. If there is a fault, then the Packet LED of the affected port will be yellow. If a port exceeds its power limit, then the Packet LED of the port will flash green. If a port has a Power over Ethernet POST error then the Status LED of the affected port will flash yellow.

Solving Hardware Problems

In the rare event of your Switch unit experiencing a hardware failure, refer to the list of suggested solutions below.

An expansion module is installed and the unit will not power up

Ensure that the expansion module is fully seated in the slot and the connectors are engaged so that the securing screws can be tightened.

A fan failure warning message is received

Your Switch has a fan monitoring system that will generate fan failure warning messages. Fan failure could potentially reduce the lifetime of the

Switch. The monitoring system polls the fan status at periodic intervals while the unit is powered up.

If one or more fans have failed in the Switch, a warning message will be generated in the following ways:

- **RMON Email Notification** — If configured, you will receive notification of the fan failure via email, SMS (Short Message Service), or pager.
- **RMON Trap** — If configured, an RMON trap is generated and sent to the management workstation.

For further information about RMON, refer to "Chapter 7: Status Monitoring and Statistics" in the Switch Implementation Guide supplied in PDF format on the CD-ROM that accompanies the Switch.

- **Command Line Interface** — An indication of a general hardware failure is provided through the Top level menu displayed when logging on to the CLI. For more detailed information about the failure select the **`system summary`** command.
- **Web interface** — An indication of fan failure is provided through the Device Summary table for the specific unit. In addition all Summary tables turn red to indicate the fan failure.

If a fan failure warning message is generated:

1. Power off the unit.
2. Check that the air vents are not obstructed.
3. Power cycle the unit. To do this, remove and reconnect the AC mains supply. If the unit has no AC main supply, remove and reconnect the DC RPS supply.
4. If another fan failure warning message is generated via the Command Line Interface or the Web interface, return the unit.

Unit fails, no SNMP fan failure message is received

1. Power cycle the unit. To do this, remove and reconnect the AC mains supply. If the unit has no AC mains supply, remove and reconnect the DC RPS supply.
2. Check the command line interface (**`system summary`** command) to determine whether a thermal shutdown has occurred.
3. If no, return the unit:

If yes, check that:

- The air vents are not obstructed.
- The ambient temperatures and environmental conditions meet those specified in Appendix C.

4 Power cycle the unit. If a further thermal shutdown occurs, and all environmental conditions are satisfactory, return the unit to 3Com.

A device is connected to a Switch 4400 PWR but power is not being supplied

If power is not being supplied to a device connected to a Switch 4400 PWR, you should do the following checks:

- Check that the device is compliant with the 802.3af standard ref. [18].

  The 4400 PWR will only supply power through the front panel ports to 802.3af compliant devices.

- Check that the power budget for the Switch has not been exceeded.

  If the power budget has been exceeded, then by default, the powered device connected to the Power over Ethernet port with the lowest priority port will lose power. However, if all the devices connected to the Switch have equal priority levels, then the port with the highest number will lose power.

  By default the Switch will allow a device to receive power as long as the Power over Ethernet power supply has 18 watts spare in its power budget. If this much power is not available the device will not be powered (unless it has a higher priority than existing powered ports) and a Power over Ethernet fault will be reported for that port. If enough power subsequently becomes available the port will be powered.

- Check that the port has not had a power limit imposed upon it.

Solving Communication Problems

If you experience communication problems with the Switch, ensure that:

- The Switch IP address and Management VLAN ID has been configured as described in Chapter 3.
- If the Switch is separated from your management application by a router, ensure that the default gateway IP address within the Switch is the same as the IP address of the router.

- The Switch's IP address has been entered correctly in your network management application (such as 3Com Network Director).

The following is a brief overview of IP addressing, and how to obtain a registered IP address.

IP Addressing

To be managed correctly, each device on your network (for example a Switch or Hub) must have a unique IP address. IP addresses have the format *n.n.n.n* where *n* is a decimal number between 0 and 255. An example IP address is 192.168.100.8.

The IP address is split into two parts:

- The first part ('192.168.100' in the example) identifies the network on which the device resides
- The second part ('.8' in the example) identifies the device within the network

The natural subnet mask for this example is 255.255.255.0.

If your network has a connection to the external IP network, that is, you access the Internet, you must apply for a registered IP address.

How do you obtain a registered IP Address?

The IP registration system ensures that every IP address used is unique; if you do not have a registered IP address, you may be using an identical address to someone else and your network will not operate correctly.

InterNIC Registration Services is the organization responsible for supplying registered IP addresses. The following contact information is correct at time of publication:

World Wide Web site: **`http://www.internic.net`**

If your IP network is internal to your organization only, that is, you do not access the Internet, you may use any arbitrary IP address as long as it is not being used by another device on your network. 3Com suggests you use addresses in the range 192.168.0.0 to 192.168.255.255 with a subnet mask of 255.255.255.0.

These suggested IP addresses are part of a group of IP addresses that have been set aside specially for use 'in house' only.

Solving Software Upgrade Problems

You can upgrade the management software of the Switch by using the *System* > *Control* > *Software Upgrade* operation in the Web Interface, or the **`system control softwareUpgrade`** command in the command line interface. For details on these options, refer to the Management Interface Reference Guide supplied in HTML format on the CD-ROM that accompanies your Switch.

If you have problems with your software upgrade, refer to the Problem Solving section in the Management Interface Reference Guide.

A SAFETY INFORMATION

You must read the following safety information before carrying out any installation or removal of components, or any maintenance procedures on the Switch 4400.

WARNING: *Warnings contain directions that you must follow for your personal safety. Follow all directions carefully.*
You must read the following safety information carefully before you install or remove the unit.

AVERTISSEMENT: *Les avertissements présentent des consignes que vous devez respecter pour garantir votre sécurité personnelle. Vous devez respecter attentivement toutes les consignes.*
Nous vous demandons de lire attentivement les consignes suivantes de sécurité avant d'installer ou de retirer l'appareil.

VORSICHT: *Warnhinweise enthalten Anweisungen, die Sie zu Ihrer eigenen Sicherheit befolgen müssen. Alle Anweisungen sind sorgfältig zu befolgen.*
Sie müssen die folgenden Sicherheitsinformationen' sorgfältig durchlesen, bevor Sie das Gerät installieren oder ausbauen.

ADVERTENCIA: *las advertencias contienen indicaciones que debe respetar por su seguridad personal. Siga las indicaciones con cuidado.*
Antes de instalar o extraer la unidad, debe leer detenidamente la siguiente información de seguridad.

AVVERTENZA: *le avvertenze contengono istruzioni indispensabili per assicurare la sicurezza personale. Seguire attentamente tutte le indicazioni fornite.*
Prima di installare o rimuovere l'unità, leggere attentamente le seguenti informazioni di sicurezza.

OSTRZEŻENIE: *Ostrzeżenia zawierają wskazówki, których należy przestrzegać dla własnego bezpieczeństwa. Należy uważnie*

przestrzegać wszystkich wskazówek. Przed instalacją lub demontażem urządzenia należy uważnie przeczytać poniższe informacje o bezpieczeństwie.

Power Cord Set — Japan

電源コードを接続する場合は、アース接続がされていることを確認してから行なってください。
アース線をはずす場合は、電源コードが接続されていないことを確認してから行なってください。

Important Safety Information

WARNING: *Installation and removal of the unit must be carried out by qualified personnel only.*

WARNING: *If installing the Switch 4400 in a stack with SuperStack II or SuperStack 3 units that are narrower than the 4400, the Switch 4400 unit must be installed below the narrower units.*

WARNING: *The unit must be earthed (grounded).*

WARNING: *Connect the unit to an earthed power supply to ensure compliance with safety standards.*

WARNING: *Power Cord Set:*
This must be approved for the country where it is used:

U.S.A. and Canada	■ The cord set must be UL-approved and CSA certified. ■ The minimum specification for the flexible cord is: No. 18 AWG Type SV or SJ 3-conductor ■ The cord set must have a rated current capacity of at least 10A. ■ The attachment plug must be an earth-grounding type with a NEMA 5-15P (15A, 125V) or NEMA 6-15P (15A, 250V) configuration.
United Kingdom only	■ The supply plug must comply with BS1363 (3-pin 13 amp) and be fitted with a 5A fuse which complies with BS1362. ■ The mains cord must be <HAR> or <BASEC> marked and be of type H03VVF3GO.75 (minimum).

Europe only:	■ The supply plug must comply with CEE 7/7 (“SCHUKO”).
	■ The mains cord must be <HAR> or <BASEC> marked and be of type H03VVF3GO.75 (minimum).
Denmark	■ The supply plug must comply with section 107-2-D1, standard DK2-1a or DK2-5a.
Switzerland	■ The supply plug must comply with SEV/ASE 1011.

WARNING: *The appliance coupler (the connector to the unit and not the wall plug) must have a configuration for mating with an EN60320/IEC320 appliance inlet.*

WARNING: *The socket outlet must be near to the unit and easily accessible. You can only remove power from the unit by disconnecting the power cord from the outlet.*

WARNING: *This unit operates under SELV (Safety Extra Low Voltage) conditions according to IEC 60950. The conditions are only maintained if the equipment to which it is connected also operates under SELV conditions.*

WARNING: *France and Peru only:*
This unit cannot be powered from IT† supplies. If your supplies are of IT type, this unit must be powered by 230V (2P+T) via an isolation transformer ratio 1:1, with the secondary connection point labelled Neutral, connected directly to earth (ground).
†Impédance à la terre.

WARNING: *U.K. only:*
If connecting a modem to the console port of the Switch 4400, only use a modem which is suitable for connection to the telecommunications system.

WARNING: *RJ-45 Ports. These are shielded RJ-45 data sockets. They cannot be used as standard traditional telephone sockets, or to connect the unit to a traditional PBX or public telephone network. Only connect RJ-45 data connectors, network telephony systems, or network telephones to these sockets.*

Either shielded or unshielded data cables with shielded or unshielded jacks can be connected to these data sockets.

WARNING: Fiber Optic ports – Optical Safety

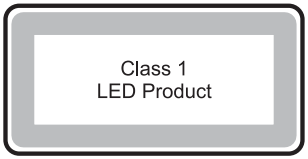

Never look at the transmit LED through a magnifying device while it is powered on. Never look directly at the fiber TX port and fiber cable ends when they are powered on.

WARNING: *The 4400 PWR (3C17205) supports Power over Ethernet on all front ports. These ports should only be used for ethernet wiring within the same building.*

WARNING: *When an Expansion Module is not installed ensure the blanking panel is fitted by tightening all screws with a suitable tool.*

L'information de Sécurité Importante

AVERTISSEMENT*: L'installation et la dépose de ce groupe doivent être confiés à un personnel qualifié.*

AVERTISSEMENT*: Si vous entassez l'unité Switch avec les unités SuperStack 3 Hub, l'unité Switch 4400 doit être installée en dessous des unités Hub plus étroites.*

AVERTISSEMENT*: Vous devez mettre l'appareil à la terre (à la masse) ce groupe.*

AVERTISSEMENT*: Brancher l'unité à une source de courant mise à la terre pour assurer la conformité aux normes de sécurité.*

***AVERTISSEMENT**: Cordon électrique:*
Il doit être agréé ans le pays d'utilisation:

Etats-Unis et Canada	■ Le cordon doit avoir reçu l'homologation des UL et un certificat de la CSA
	■ Le cordon souple doit respecter, à titre minimum, les spécifications suivantes :
	■ calibre 18 AWG
	■ type SV ou SJ
	■ à 3 conducteurs
	■ Le cordon doit être en mesure d'acheminer un courant nominal d'au moins 10 A
	■ La prise femelle de branchement doit être du type à mise à la terre (mise à la masse) et respecter la configuration NEMA 5-15P (15 A, 125 V) ou NEMA 6-15P (15 A, 250 V)
Danemark	■ La prise mâle d'alimentation doit respecter la section 107-2 D1 de la norme DK2 1a ou DK2 5a
Europe	■ La prise secteur doit être conforme aux normes CEE 7/7 ("SCHKO")
	■ LE cordon secteur doit porter la mention <HAR> ou <BASEC> et doit être de type HO3VVF3GO.75 (minimum).
Suisse	■ La prise mâle d'alimentation doit respecter la norme SEV/ASE 1011

***AVERTISSEMENT**: Le coupleur d'appareil (le connecteur du groupe et non pas la prise murale) doit respecter une configuration qui permet un branchement sur une entrée d'appareil EN60320/CEI 320.*

***AVERTISSEMENT**: La prise secteur doit se trouver à proximité de l'appareil et son accès doit être facile. Vous ne pouvez mettre l'appareil hors circuit qu'en débranchant son cordon électrique au niveau de cette prise.*

***AVERTISSEMENT**: L'appareil fonctionne à une tension extrêmement basse de sécurité qui est conforme à la norme CEI 60950. Ces conditions ne sont maintenues que si l'équipement auquel il est raccordé fonctionne dans les mêmes conditions.*

***AVERTISSEMENT**: France et Pérou uniquement:*
Ce groupe ne peut pas être alimenté par un dispositif à impédance à la terre. Si vos alimentations sont du type impédance à la terre, ce groupe doit être alimenté par une tension de 230 V (2 P+T) par le biais d'un transformateur d'isolement à rapport 1:1, avec un point secondaire de

connexion portant l'appellation Neutre et avec raccordement direct à la terre (masse).

***AVERTISSEMENT**: Points d'accès RJ-45. Ceux-ci sont protégés par des prises de données. Ils ne peuvent pas être utilisés comme prises de téléphone conventionnelles standard, ni pour la connection de l'unité à un réseau téléphonique central privé ou public. Raccorder seulement connecteurs de données RJ-45, systèmes de réseaux de téléphonie ou téléphones de réseaux à ces prises.*

Il est possible de raccorder des câbles protégés ou non protégés avec des jacks protégés ou non protégés à ces prises de données.

AVERTISSEMENT: Ports pour fibres optiques – sécurité sur le plan optique.

Ne regardez jamais le voyant (DEL) d'émission en utilisant un dispositif d'agrandissement, tant qu'il est sous tension. Ne regardez jamais directement le port TX (Transmission) à fibres optiques et les embouts de câbles à fibres optiques tant qu'ils sont sous tension.

***AVERTISSEMENT**: Le 4400 PWR (3C17205) prend en charge la mise sous tension par Ethernet au niveau de tous les ports frontaux. Ces ports ne doivent être utilisés que pour le câblage Ethernet au sein d'un même bâtiment.*

***AVERTISSEMENT:** Si le module d'expansion nest pas installé, veillez à bien installer la plaque d'obturation et serrez toutes les vis à l'aide d'un outil approprié.*

Wichtige Sicherheitsinformationen

***VORSICHT:** Die Installation und der Ausbau des Geräts darf nur durch Fachpersonal erfolgen.*

VORSICHT: *Wenn die Switch 4400 Einheit in einer Stapel mit anderen SuperStack 3 Hub Einheiten eingebaut werden soll, muß die Switch 4400 Einheit unter die schmaleren Hub Einheiten eingebaut werden.*

VORSICHT: *Das Gerät muß geerdet sein.*

VORSICHT: *Das Gerät muß an eine geerdete Steckdose angeschlossen werden, die europäischen Sicherheitsnormen erfüllt.*

VORSICHT: *Der Anschlußkabelsatz muß mit den Bestimmungen des Landes übereinstimmen, in dem er verwendet werden soll.*

VORSICHT: *Der Gerätestecker (der Anschluß an das Gerät, nicht der Wandsteckdosenstecker) muß eine passende Konfiguration für einen Geräteeingang gemäß EN60320/IEC320 haben.*

VORSICHT: *Die Netzsteckdose muß in der Nähe des Geräts und leicht zugänglich sein. Die Stromversorgung des Geräts kann nur durch Herausziehen des Gerätenetzkabels aus der Netzsteckdose unterbrochen werden.*

VORSICHT: **Europe**

- *Das Netzkabel muß vom Typ HO3VVF3GO.75 (Mindestanforderung) sein und die Aufschrift <HAR> oder <BASEC> tragen.*
- *Der Netzstecker muß die Norm CEE 7/7 erfüllen (”SCHUKO”).*

VORSICHT: *Der Betrieb dieses Geräts erfolgt unter den SELV-Bedingungen (Sicherheitskleinstspannung) gemäß IEC 60950. Diese Bedingungen sind nur gegeben, wenn auch die an das Gerät angeschlossenen Geräte unter SELV-Bedingungen betrieben werden.*

VORSICHT: *RJ-45-Porte. Diese Porte sind geschützte Datensteckdosen. Sie dürfen weder wie normale traditionelle Telefonsteckdosen noch für die Verbindung der Einheit mit einem traditionellem privatem oder öffentlichem Telefonnetzwerk gebraucht werden. Nur RJ-45-Datenanscluße, Telefonnetzsysteme or Netztelefone an diese Steckdosen anschließen.*

Entweder geschützte oder ungeschützte Buchsen dürfen an diese Datensteckdosen angeschlossen werden.

VORSICHT: Faseroptikanschlüsse – Optische Sicherheit

Niemals mit einem Vergrößerungsgerät ein Übertragungs-LED betrachten, während dieses eingeschaltet ist. Niemals direkt auf den Faser-TX-Anschluß und auf die Faserkabelenden schauen, während diese eingeschaltet sind.

VORSICHT: *Das 4400 PWR (3C17205) unterstützt die Stromversorgung per Ethernet an allen vorderen Ports. Diese Ports dürfen nur für die Ethernet-Verkabelung im gleichen Gebäude verwendet werden.*

VORSICHT: *Ist kein Erweiterungsmodul installiert, überprüfen Sie bitte den Sitz der Stanzplatte, indem Sie alle Schrauben mit einem geeigneten Werkzeug anziehen.*

Información de seguridad importante

ADVERTENCIA: *la instalación y retirada de la unidad sólo debe llevarla a cabo personal cualificado.*

ADVERTENCIA: *si instala el Switch 4400 en una pila con unidades SuperStack II o SuperStack 3 que son más estrechas que el 4400, la unidad Switch 4900 debe instalarse debajo de las unidades más estrechas.*

ADVERTENCIA: *la unidad debe tener toma de tierra (conexión a tierra).*

ADVERTENCIA: *conecte la unidad a una fuente de alimentación con toma de tierra para garantizar el cumplimiento de las normas de seguridad.*

ADVERTENCIA: *conjunto de cables eléctricos:*
debe estar homologado para el país donde se utilice:

EE.UU. y Canadá	■ El conjunto de cables debe estar homologado por UL y tener la certificación CSA.
	■ La especificación mínima del cable flexible es:
	■ Nº 18 AWG
	■ Tipo SV o SJ
	■ Tres conductores
	■ El conjunto de cables debe tener una capacidad de corriente nominal de al menos 10 A.
	■ El enchufe de conexión debe ser de tipo de toma de tierra con una configuración NEMA 5-15P (15 A, 125 V) o NEMA 6-15P (15 A, 250 V).
Sólo para el Reino Unido	■ La toma de alimentación debe cumplir la norma BS1363 (3 patillas, 13 A) e instalarse con un fusible de 5 A que cumpla BS1362.
	■ El cable de alimentación de red debe tener la marca <HAR> o <BASEC> y ser de tipo H03VVF3GO.75 (mínimo).
Sólo para Europa	■ La toma de alimentación debe cumplir la norma CEE 7/7 ("SCHUKO").
	■ El cable de alimentación de red debe tener la marca <HAR> o <BASEC> y ser de tipo H03VVF3GO.75 (mínimo).
Dinamarca	■ La toma de alimentación debe cumplir la sección 107-2-D1 de la norma DK2-1a o DK2-5a.
Suiza	■ La toma de alimentación debe cumplir la norma SEV/ASE 1011.

ADVERTENCIA: *el acoplador del equipo (el conector para la unidad y no la toma de la pared) debe tener una configuración que se adapte a una entrada del equipo EN60320/IEC320.*

ADVERTENCIA: *el enchufe debe estar cerca de la unidad y ser de fácil acceso. La única forma de cortar la alimentación de la unidad consiste en desconectar el cable eléctrico de la toma de corriente.*

ADVERTENCIA: *esta unidad funciona en condiciones SELV (voltaje extrabajo de seguridad) de conformidad con la norma IEC 60950. Las condiciones sólo se mantienen si el equipo al que esté conectada la unidad también funciona en condiciones SELV.*

ADVERTENCIA: *sólo para Francia y Perú:*
esta unidad no puede recibir corriente de fuentes IT†. Si las fuentes de suministro de corriente son de tipo IT, esta unidad debe recibir 230 V (2P+T) a través de un transformador aislador con relación 1:1, con el punto de conexión secundario etiquetado como neutro conectado directamente a tierra.

†Impédance à la terre.

ADVERTENCIA: *sólo para el Reino Unido:*
si conecta un módem al puerto de consola del Switch 4400, utilice sólo un módem que sea adecuado para la conexión con el sistema de telecomunicaciones.

ADVERTENCIA: *puertos RJ-45. Son conectores de datos RJ-45 blindados. No pueden utilizarse como tomas de teléfono tradicionales estándar ni para conectar la unidad a una central de conmutación PBX tradicional ni a una red telefónica pública. Conecte sólo conectores de datos RJ-45, sistemas de telefonía de red local o teléfonos de red local a estas tomas.*

Pueden conectarse cables de datos blindados o sin blindaje con clavijas blindadas o sin blindaje a estos conectores de datos.

ADVERTENCIA: *puertos de fibra óptica: seguridad óptica*

(Class 1 LED Product) (Producto LED de clase 1)

Nunca mire el LED de transmisión a través de una lente de aumento mientras está encendido. No mire nunca directamente al puerto de transmisión de fibra óptica ni a los extremos del cable de fibra óptica mientras estén conectados.

ADVERTENCIA: *el Switch 4400 PWR (3C17205) admite Potencia sobre Ethernet en todos los puertos del panel frontal. Estos puertos sólo deben utilizarse para cableado ethernet dentro del mismo edificio.*

ADVERTENCIA: *si no hay instalado un Expansion Module, compruebe que el panel de cegamiento está acoplado apretando todos los tornillos con una herramienta adecuada.*

Importanti Informazioni di Sicurezza

AVVERTENZA: *le operazioni di installazione e rimozione dell'unità devono essere eseguite esclusivamente da personale qualificato.*

AVVERTENZA: *se si installa lo Switch 4400 in uno stack con unità SuperStack II o SuperStack 3 più strette del modello 4400, posizionare lo Switch 4400 sotto tali unità.*

AVVERTENZA: *l'unità deve disporre di messa a terra.*

AVVERTENZA: *per rispettare gli standard di sicurezza, è necessario collegare l'unità a una fonte di alimentazione dotata di messa a terra.*

AVVERTENZA: *set dei cavi di alimentazione*
Deve essere approvato per il paese in cui viene utilizzato.

Stati Uniti e Canada	■ "Il cavo deve avere l'approvazione UL e la certificazione CSA
	■ "La specifica minima per il cavo flessibile è: N. 18 AWG Tipo SV o SJ 3 conduttori
	■ "Il set di cavi deve avere una capacità nominale di almeno 10 A.
	■ "La spina di collegamento deve essere dotata di messa a terra, con configurazione NEMA 5-15P (15 A, 125 V) o NEMA 6-15P (15 A, 250 V).
Solo Regno Unito	■ "La spina di alimentazione deve essere conforme BS1363 (3 pin 13 amp) e dotata di un fusibile da 5 A conforme BS1362.
	■ "Il cavo dell'alimentazione di rete deve essere contrassegnato dai marchi <HAR> o <BASEC> ed essere di tipo H03VVF3GO.75 (minimo).
Solo Europa	■ "La spina di alimentazione deve essere conforme CEE 7/7 (tipo "SCHUKO").
	■ "Il cavo dell'alimentazione di rete deve essere contrassegnato dai marchi <HAR> o <BASEC> ed essere di tipo H03VVF3GO.75 (minimo).
Danimarca	■ "La spina di alimentazione deve essere conforme alla sezione 107-2-D1, standard DK2-1a o DK2

Svizzera

- "La spina di alimentazione deve essere conforme SEV/ASE 1011

AVVERTENZA: *l'accoppiatore (il connettore all'unità e non la spina a muro) deve avere una configurazione abbinabile a una presa EN60320/IEC320.*

AVVERTENZA: *la presa deve trovarsi vicino all'unità ed essere facilmente accessibile. L'unico modo per rimuovere l'alimentazione dall'unità consiste nello scollegare il cavo di alimentazione dalla presa.*

AVVERTENZA: *questa unità funziona alle condizioni SELV (Safety Extra Low Voltage) previste dalla norma IEC 60950. Tali condizioni sono mantenute solo se anche l'apparecchiatura a cui è collegata opera nelle stesse condizioni.*

AVVERTENZA: *solo per Francia e Perù. Questa unità non può ricevere alimentazione di tipo IT†. Se l'alimentazione è di tipo IT, l'unità deve essere alimentata a 230 V (2P+T) tramite un trasformatore di isolamento con rapporto 1:1, con il punto di collegamento secondario contrassegnato come Neutro, collegato direttamente a terra.*
†Impédance à la terre.

AVVERTENZA: *solo Regno Unito. Se si collega un modem alla porta Console dello Switch 4400, utilizzare solo un modem idoneo per il collegamento con il sistema di telecomunicazioni.*

AVVERTENZA: *le porte RJ-45 sono prese dati RJ-45 schermate. Non è pertanto possibile utilizzarle come normali prese telefoniche né per collegare l'unità a un PBX (Private Branch Exchange, centralino telefonico privato) o a una rete telefonica pubblica. Collegare a queste porte solo prese dati RJ-45, sistemi di telefonia o telefoni di rete. A queste prese dati è possibile collegare cavi dati schermati o non schermati con prese dati schermate o non schermate.*

AVVERTENZA: *porte a fibre ottiche - Protezione degli occhi*

Non guardare mai il LED di trasmissione attraverso uno strumento ottico di ingrandimento quando è acceso. Non guardare mai direttamente la porta TX a fibre ottiche e le estremità del cavo a fibre ottiche quando sono accese.

AVVERTENZA: *lo Switch 4400 PWR (3C17205) supporta l'alimentazione su Ethernet su tutte le porte del pannello anteriore. Tali porte devono essere utilizzate soltanto per il cablaggio Ethernet all'interno dello stesso edificio.*

AVVERTENZA: *quando non è installato alcun modulo di espansione, fissare il pannello di copertura serrando tutte le viti con un cacciavite idoneo.*

Ważne informacje o zabezpieczeniach

OSTRZEŻENIE: *Instalacja i demontaż urządzenia mogą być wykonywane tylko przez wykwalifikowany personel.*

OSTRZEŻENIE: *Podczas instalacji Switch 5500 w stosie z urządzeniami SuperStack II lub SuperStack 3, które są węższe niż Switch 5500, urządzenie Switch 5500 musi być zainstalowane pod węższym urządzeniem.*

OSTRZEŻENIE: *Urządzenie musi być uziemione lub musi być podłączone do uziemionego źródła zasilania w celu zapewnienia zgodności z wymogami bezpieczeństwa.*

OSTRZEŻENIE: *Zestaw przewodów zasilania:*
Niezbędna jest zgodność z przepisami kraju, w którym jest stosowany:

Stany Zjednoczone i Kanada

- Zestaw przewodów musi posiadać zezwolenie UL oraz certyfikat CSA.
- Minimalna specyfikacja przewodu giętkiego: Przewód typu SV lub SJ 3 o średnicy 18 wg specyfikacji AWG.
- Zestaw przewodów musi posiadać pojemność prądu znamionowego przynajmniej 10A.
- Wtyczka musi być uziemiająca z układem typu NEMA 5-15P (15A, 125V) lub NEMA 6-15P (15A, 250V).

Wielka Brytania	■ Wtyczka musi być zgodna z normą BS1363 (3-pinowa 13 amperów) i musi być wyposażona w bezpiecznik 5A zgodny z normą BS1362.
	■ Przewód sieci zasilającej musi być oznaczony <HAR> lub <BASEC> i musi być typu H03VVF3g0.75 (minimum).
Europa	■ Wtyczka zasilająca musi być zgodna z normą CEE 7/7 („SCHUKO”).
	■ Przewód sieci zasilającej musi być oznaczony <HAR> lub <BASEC> i musi być typu H03VVF3g0.75 (minimum).
Dania	■ Wtyczka zasilająca musi być zgodna z sekcją 107-2-D1 normy DK2-1a lub DK2-5a.
Szwajcaria	■ Wtyczka zasilająca musi być zgodna z normą SEV/ASE 1011.

OSTRZEŻENIE: *Złączka urządzenia (podłączona do przełącznika, a nie do wtyczki ściennej) musi być odpowiednio dopasowana do normy EN60320/IEC320 otworu wlotowego.*

OSTRZEŻENIE: *Gniazdo zasilające musi być umieszczone w pobliżu urządzenia i musi być łatwo dostępne.*

OSTRZEŻENIE: *Urządzenie to pracuje w warunkach SELV (Safety Extra Low Voltage – Bezpieczne niskie napięcie) zgodnie z normą IEC 60950. Takie warunki są zachowane tylko, jeśli osprzęt, do którego jest podłączone, również pracuje w warunkach SELV.*

OSTRZEŻENIE: *Sólo para Francia y Perú:*
Esta unidad no puede recibir corriente de fuentes IT†. Si las fuentes de suministro de corriente son de tipo IT, esta unidad debe recibir 230V (2P+T) a través de un transformador aislador con relación 1:1, con el punto de conexión secundario etiquetado como neutro conectado directamente a tierra. †Impédance ŕ la terre.

OSTRZEŻENIE: *Tylko Wielka Brytania:*
Podczas podłączania modemu do portu konsoli Switch 5500 należy stosować tylko modem odpowiedni do podłączenia do sieci telekomunikacyjnej.

OSTRZEŻENIE: *Porty RJ-45. Są to ekranowane gniazda danych RJ-45. Nie mogą być używane jako tradycyjne gniazda telekomunikacyjne lub stosowane do podłączenia urządzenia do publicznej sieci telefonicznej lub centrali PBX. Do tych gniazd należy podłączać jedynie łącza danych*

RJ-45, sieciowe systemy telefoniczne lub telefony sieciowe. Zarówno osłonięte, jak i nieosłonięte przewody z danymi wraz z osłoniętymi lub nieosłoniętymi wtykami mogą być podłączone do tych gniazd.

OSTRZEŻENIE: *Porty światłowodowe – bezpieczeństwo*

Nie wolno nigdy patrzeć na włączoną diodę laser transmisyjny przez urządzenie wzmacniające. Nie wolno nigdy patrzeć bezpośrednio na port włókna TX i końcówki światłowodów, jeśli są zasilane.

OSTRZEŻENIE: *To urządzenie ma kilka punktów podłączenia zasilania. Aby wyłączyć urządzenie, należy odłączyć wszystkie punkty zasilania.*

OSTRZEŻENIE: *Instalacja zasilacza nadmiarowego (RPS) powinna być wykonywana przez odpowiednio przeszkolony i wykwalifikowany personel.*

OSTRZEŻENIE: *Te instrukcje należy przeczytać razem z instrukcjami dotyczącymi bezpieczeństwa i instalacji dostarczonymi z systemem zasilania nadmiarowego.*

OSTRZEŻENIE: *Jeśli dowolny przełącznik Switch 5500 jest zasilany z zasilacza RPS, urządzenie musi być uziemione. Można to uzyskać przez podłączenie przewodu zasilającego do urządzenia lub przez podłączenie końcówki uziemienia z tyłu urządzenia do dobrego elementu uziemiającego. Należy upewnić się, że urządzenie zostało uziemione przed podłączeniem zasilacza prądu stałego do zasilacza RPS.*

OSTRZEŻENIE: *Wszystkie zasilacze RPS muszą mieć certyfikat nieuziemionego źródła zasilania SELV zgodny z normami IEC 60950-1/UL 60950-1/EN 60950-1.*

OSTRZEŻENIE: *Te instrukcje należy przeczytać razem z charakterystyką zasilającego prądu stałego przełącznika Switch 5500 opisaną w Dodatku C, Specyfikacja techniczna.*

OSTRZEŻENIE: *Podczas podłączania kabla do zasilacza RPS należy przestrzegać zaleceń producenta.*

OSTRZEŻENIE: *Podczas podłączania kabla do zasilacza RPS należy upewnić się, że wyłącznik w zasilaczu jest w pozycji otwartej (wyłączony).*

OSTRZEŻENIE: *Należy upewnić się, że końcówka dodatnia przełącznika jest podłączona do dodatniej (wspólnej) końcówki zasilacza RPS, a ujemna końcówka przełącznika jest podłączona do ujemnej końcówki (wyłącznika) zasilacza RPS.*

B PIN-OUTS

Null Modem Cable

9-pin to RS-232 25-pin

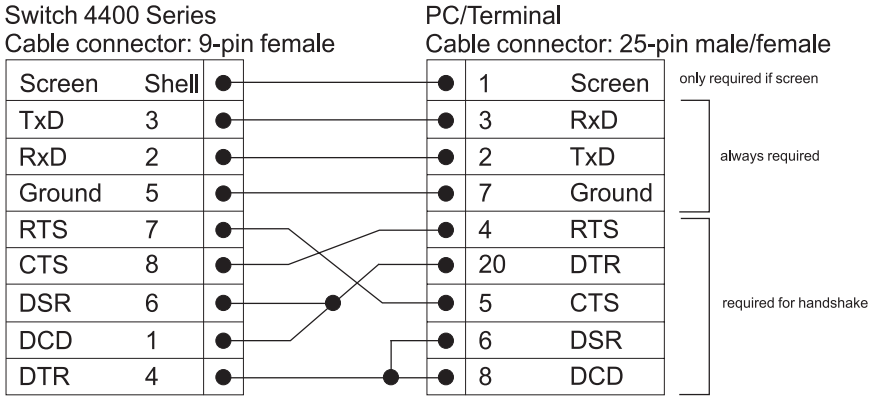

PC-AT Serial Cable

9-pin to 9-pin

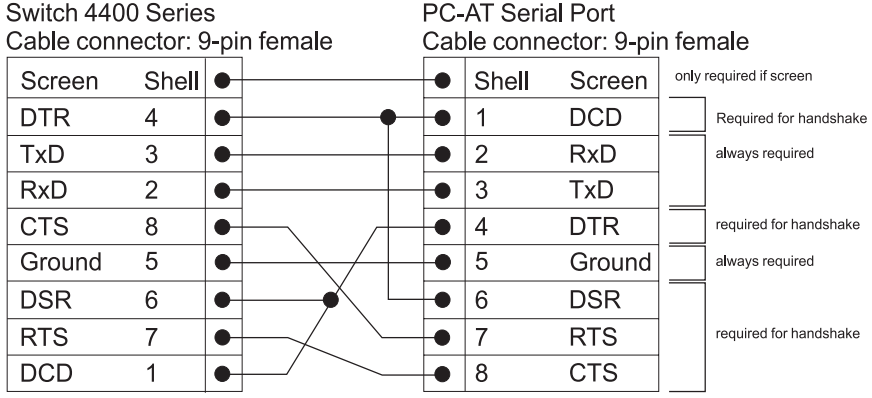

Modem Cable

9-pin to RS-232 25-pin

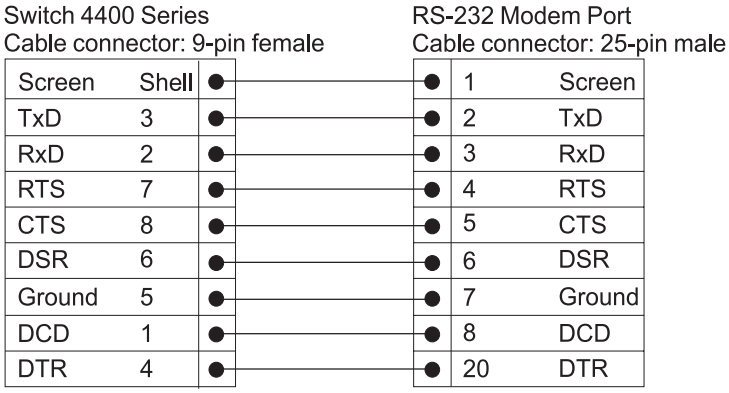

RJ-45 Pin Assignments

Pin assignments are identical for 10BASE-TX and 100BASE-T RJ-45 connectors.

Table 11 Pin assignments

Pin Number	10/100BASE-T	1000BASE-T
Ports configured as MDI		
1	Transmit Data +	Bidirectional Data A+
2	Transmit Data +	Bidirectional Data A-
3	Receive Data +	Bidirectional Data B+
4	Not assigned	Bidirectional Data C+
5	Not assigned	Bidirectional Data C-
6	Receive Data –	Bidirectional Data B-
7	Not assigned	Bidirectional Data D+
8	Not assigned	Bidirectional Data D-

Table 12 Pin assignments

Pin Number	10/100BASE-T	1000BASE-T
Ports configured as MDIX		
1	Receive Data +	Bidirectional Data B+
2	Receive Data -	Bidirectional Data B-
3	Transmit Data +	Bidirectional Data A+
4	Not assigned	Bidirectional Data A-
5	Not assigned	Bidirectional Data D+
6	Transmit Data	Bidirectional Data D-
7	Not assigned	Bidirectional Data C+
8	Not assigned	Bidirectional Data C-

C TECHNICAL SPECIFICATIONS

Switch 4400 (24-port) and Switch 4400 SE

Physical Dimensions	Height: 44 mm (1.7 in.) x Width: 440 mm (17.3 in.) x Depth: 274 mm (10.8 in.) Weight: 2.8 kg (6.2 lbs)
Environmental Requirements	
Operating Temperature	0 ° to 40 °C (32 ° to 104 °F)
Storage Temperature	–40 ° to +70 °C (-40 ° to 158 °F)
Operating Humidity	10–95% relative humidity, non-condensing
Standards	EN60068 to 3Com schedule (Package testing: paras 2.1, 2.2, 2.30, and 2.32. Operational testing: paras 2.1, 2.2, 2.30 and 2.13).
Safety	
Agency Certifications	UL 1950, EN60950, CSA 22.2 No. 950, IEC 60950
EMC	
Emissions	CISPRR 22 Class A, EN55022 Class A, FCC Part 15 Subpart B Class A, ICES-003 Class A, AS/NZS 3548 Class A, EN61000-3-2, EN61000-3-3
Immunity	EN 55024
Heat Dissipation	80 watts maximum (275 BTU/hour maximum)
Power Supply	
AC Line Frequency	50/60 Hz
Input Voltage Options	90–240 VAC
Current Rating	2.3 A (amps)(maximum)

(continued)

Standards Supported	**SNMP** SNMP protocol (RFC 1157) SNMPv2c (RFC 1901-1907) SNMPv3 (RFCs 3410-3418) MIB II Traps (RFC 1215) MIB-II (RFC 1213) Bridge MIB (RFC 1493) Bridge extensions (RFC 2674) RMON MIB II (RFC 2021) Remote Monitoring MIB (RFC 1757) RS232 (RFC 1659) Interfaces (RFC 2233) MAU MIB (RFC 2239) Ether-like MIB (RFC 2665) MAU MIB (RFC 2668) **Terminal Emulation** Telnet (RFC 854) Secure Shell v2 (SSH-2) PING (RFC 2925 Partially supported)	**Protocols Used for Administration** UDP (RFC 768) IP (RFC 791) ICMP (RFC 792) TCP (RFC 793) ARP (RFC 826) TFTP (RFC 783) DHCP (RFC 2131, RFC 2132, RFC 1534) BOOTP (RFC 951, RFC 1497) RADIUS (RFC 2618, 2620) SNTP (RFC 2030) Syslog (RFC 3164) **Other Standards Supported** Link aggregation (IEEE 802.3ad) Network Login (IEEE 802.1X) IGMP v1 (RFC 1112) IGMP v2 (RFC 2286) IGMP v3 (RFC 3376)

Switch 4400 PWR (24-port)

Physical Dimensions	Height: 44 mm (1.7 in.) x Width: 440 mm (17.3 in.) x Depth: 295 mm (11.4 in.) Weight: 4.4 kg (9.7 lbs)
Environmental Requirements	
Operating Temperature	0 ° to 40 °C (32 ° to 104 °F)
Storage Temperature	–20 ° to +70 °C (-4 ° to 158 °F)
Operating Humidity	10–95% relative humidity, non-condensing
Standards	EN60068 to 3Com schedule (Package testing: paras 2.1, 2.2, 2.30, and 2.32. Operational testing: paras 2.1, 2.2, 2.30 and 2.13).
Safety	
Agency Certifications	UL60950, EN60950, CSA 22.2 No. 60950, IEC 60950
EMC	
Emissions	CISPRR 22 Class A, EN55022 Class A, FCC Part 15 Subpart B Class A, ICES-003 Class A, AS/NZS 3548 Class A, EN61000-3-2, EN61000-3-3
Immunity	EN 55024
Heat Dissipation	170 watts maximum (580 BTU/hour maximum)
Power Supply	
AC Line Frequency	50/60 Hz
Input Voltage Options	100–240 VAC
Current Rating	2.5 A (amps)(maximum)

Standards Supported	**SNMP** SNMP protocol (RFC 1157) SNMPv2c (RFC 1901-1907) SNMPv3 (RFCs 3410-3418) MIB-II (RFC 1213) Bridge MIB (RFC 1493) RMON MIB II (RFC 2021) Remote Monitoring MIB (RFC 1757) MAU MIB (RFC 2239) MAU MIB (RFC 2668) MIB II Traps (RFC 1215) RS232 (RFC 1659) Interfaces (RFC 2233) Ether-like MIB (RFC 2665) Bridge extensions (RFC 2674) **Terminal Emulation** Telnet (RFC 854) Secure Shell v2 (SSH-2) PING (RFC 2925 Partially supported)	**Protocols Used for Administration** UDP (RFC 768) IP (RFC 791) ICMP (RFC 792) TCP (RFC 793) ARP (RFC 826) TFTP (RFC 783) DHCP (RFC 2131, RFC 2132, RFC 1534) BOOTP (RFC 951, RFC 1497) RADIUS (RFC 2618, 2620) SNTP (RFC 2030) Syslog (RFC 3164) **Other Standards Supported** Link aggregation (IEEE 802.3ad) Network Login (IEEE 802.1X) IGMP v1 (RFC 1112) IGMP v2 (RFC 2286) IGMP v3 (RFC 3376) Power over Ethernet (802.3af)

Switch 4400 (48-port)

Physical Dimensions	Height: 44 mm (1.7 in.) x Width: 440 mm (17.3 in.) x Depth: 274 mm (10.8 in.) Weight: 3.2 kg (7.1 lbs)
Environmental Requirements	
Operating Temperature	0 ° to 40 °C (32 ° to 104 °F)
Storage Temperature	–40 ° to +70 °C (-40 ° to 158 °F)
Operating Humidity	10–95% relative humidity, non-condensing
Standards	EN60068 to 3Com schedule (Package testing: paras 2.1, 2.2, 2.30, and 2.32. Operational testing: paras 2.1, 2.2, 2.30 and 2.13).
Safety	
Agency Certifications	UL60950, EN60950, CSA 22.2 No. 60950, IEC 60950
EMC	
Emissions	CISPR 22 Class A, EN55022 Class A, FCC Part 15 Subpart B Class A, ICES-003 Class A, AS/NZS 3548 Class A, VCCI Class A, EN61000-3-2, EN61000-3-3
Immunity	EN 55024
Heat Dissipation	80 watts maximum (275 BTU/hour maximum)
Power Supply	
AC Line Frequency	50/60 Hz
Input Voltage Options	90–240 VAC
Current Rating	2.3 A (amps)(maximum)

Standards Supported	**SNMP** SNMP protocol (RFC 1157) SNMPv2c (RFC 1901-1907) SNMPv3 (RFCs 3410-3418) MIB-II (RFC 1213) Bridge MIB (RFC 1493) RMON MIB II (RFC 2021) Remote Monitoring MIB (RFC 1757) MAU MIB (RFC 2239) MIB II Traps (RFC 1215) RS232 (RFC 1659) Interfaces (RFC 2233) Ether-like MIB (RFC 2665) MAU MIB (RFC 2668) Bridge extensions (RFC 2674) **Terminal Emulation** Telnet (RFC 854) Secure Shell v2 (SSH-2) PING (RFC 2925 Partially supported)	**Protocols Used for Administration** UDP (RFC 768) IP (RFC 791) ICMP (RFC 792) TCP (RFC 793) ARP (RFC 826) TFTP (RFC 783) DHCP (RFC 2131, RFC 2132, RFC 1534) BOOTP (RFC 951, RFC 1497) RADIUS (RFC 2618, 2620) SNTP (RFC 2030) Syslog (RFC 3164) **Other Standards Supported** Link aggregation (IEEE 802.3ad) Network Login (IEEE 802.1X) IGMP v1 (RFC 1112) IGMP v2 (RFC 2286) IGMP v3 (RFC 3376)

Switch 4400 FX

Physical Dimensions	Height: 44 mm (1.7 in.) x Width: 440 mm (17.3 in.) x Depth: 274 mm (10.8 in.) Weight: 2.8 kg (6.2 lbs)
Environmental Requirements	
Operating Temperature	0 ° to 40 °C (32 ° to 104 °F)
Storage Temperature	–40 ° to +70 °C (-40 ° to 158 °F)
Operating Humidity	10–95% relative humidity, non-condensing
Standards	EN60068 to 3Com schedule (Package testing: paras 2.1, 2.2, 2.30, and 2.32. Operational testing: paras 2.1, 2.2, 2.30 and 2.13).
Safety	
Agency Certifications	UL60950, EN60950, CSA 22.2 No. 60950, IEC 60950
EMC	
Emissions	CISPRR 22 Class A, EN55022 Class A, FCC Part 15 Subpart B Class A, ICES-003 Class A, AS/NZS 3548 Class A, EN61000-3-2, EN61000-3-3
Immunity	EN 55024
Heat Dissipation	80 watts maximum (275 BTU/hour maximum)
Power Supply	
AC Line Frequency	50/60 Hz
Input Voltage Options	90–240 VAC
Current Rating	2.3 A (amps)(maximum)

(continued)

Standards Supported	**SNMP** SNMP protocol (RFC 1157) SNMPv2c (RFC 1901-1907) SNMPv3 (RFCs 3410-3418) MIB-II (RFC 1213) Bridge MIB (RFC 1493) RMON MIB II (RFC 2021) Remote Monitoring MIB (RFC 1757) MAU MIB (RFC 2239) MIB II Traps (RFC 1215) RS232 (RFC 1659) Interfaces (RFC 2233) Ether-like MIB (RFC 2665) MAU MIB (RFC 2668) Bridge extensions (RFC 2674) **Terminal Emulation** Telnet (RFC 854) Secure Shell v2 (SSH-2) PING (RFC 2925 Partially supported)	**Protocols Used for Administration** UDP (RFC 768) IP (RFC 791) ICMP (RFC 792) TCP (RFC 793) ARP (RFC 826) TFTP (RFC 783) DHCP (RFC 2131, RFC 2132, RFC 1534) BOOTP (RFC 951, RFC 1497) RADIUS (RFC 2618, 2620) SNTP (RFC 2030) Syslog (RFC 3164) **Other Standards Supported** Link aggregation (IEEE 802.3ad) Network Login (IEEE 802.1X) IGMP v1 (RFC 1112) IGMP v2 (RFC 2286) IGMP v3 (RFC 3376)

D Obtaining Support for your Product

Register Your Product

Warranty and other service benefits start from the date of purchase, so it is important to register your product quickly to ensure you get full use of the warranty and other service benefits available to you.

Warranty and other service benefits are enabled through product registration. Register your product at **`http://eSupport.3com.com/`**. 3Com eSupport services are based on accounts that you create or have authorization to access. First time users must apply for a user name and password that provides access to a number of eSupport features including Product Registration, Repair Services, and Service Request. If you have trouble registering your product, please contact 3Com Global Services for assistance.

Purchase Value-Added Services

To enhance response times or extend warranty benefits, contact 3Com or your authorized 3Com reseller. Value-added services like 3Com Express℠ and Guardian℠ can include 24x7 telephone technical support, software upgrades, onsite assistance or advance hardware replacement. Experienced engineers are available to manage your installation with minimal disruption to your network. Expert assessment and implementation services are offered to fill resource gaps and ensure the success of your networking projects. More information on 3Com maintenance and Professional Services is available at **`http://www.3com.com/`**

Contact your authorized 3Com reseller or 3Com for a complete list of the value-added services available in your area.

Troubleshoot Online

You will find support tools posted on the 3Com web site at **http://www.3com.com/**

3Com Knowledgebase helps you troubleshoot 3Com products. This query-based interactive tool is located at **http://knowledgebase.3com.com** and contains thousands of technical solutions written by 3Com support engineers.

Access Software Downloads

Software Updates are the bug fix / maintenance releases for the version of software initially purchased with the product. In order to access these Software Updates you must first register your product on the 3Com web site at **http://eSupport.3com.com/**

First time users will need to apply for a user name and password. A link to software downloads can be found at **http://eSupport.3com.com/**, or under the Product Support heading at **http://www.3com.com/**

Software Upgrades are the software releases that follow the software version included with your original product. In order to access upgrades and related documentation you must first purchase a service contract from 3Com or your reseller.

Telephone Technical Support and Repair

To enable telephone support and other service benefits, you must first register your product at **http://eSupport.3com.com/**

Warranty and other service benefits start from the date of purchase, so it is important to register your product quickly to ensure you get full use of the warranty and other service benefits available to you.

When you contact 3Com for assistance, please have the following information ready:

- Product model name, part number, and serial number
- Proof of purchase, if you have not pre-registered your product
- A list of system hardware and software, including revision level
- Diagnostic error messages
- Details about recent configuration changes, if applicable

To send a product directly to 3Com for repair, you must first obtain a return authorization number (RMA). Products sent to 3Com, without authorization numbers clearly marked on the outside of the package, will be returned to the sender unopened, at the sender's expense. If your product is registered and under warranty, you can obtain an RMA number online at **`http://eSupport.3com.com/`**. First time users will need to apply for a user name and password.

Contact Us

3Com offers telephone, e-mail and internet access to technical support and repair services. To access these services for your region, use the appropriate telephone number, URL or e-mail address from the list below.

Telephone numbers are correct at the time of publication. Find a current directory of contact information posted on the 3Com web site at **`http://csoweb4.3com.com/contactus/`**

Country	Telephone Number	Country	Telephone Number
Asia, Pacific Rim Telephone Technical Support and Repair			
Australia	1 800 678 515	Philippines	1235 61 266 2602 or 1800 1 888 9469
Hong Kong	800 933 486		
India	+61 2 9424 5179 or 000800 650 1111	P.R. of China	800 810 3033
		Singapore	800 6161 463
Indonesia	001 803 61009	S. Korea	080 333 3308
Japan	00531 616 439 or 03 3507 5984	Taiwan	00801 611 261
		Thailand	001 800 611 2000
Malaysia	1800 801 777		
New Zealand	0800 446 398		
Pakistan	+61 2 9937 5083		
You can also obtain support in this region using the following e-mail: **`apr_technical_support@3com.com`**			
Or request a repair authorization number (RMA) by fax using this number:			+ 65 543 6348
Europe, Middle East, and Africa Telephone Technical Support and Repair			
From anywhere in these regions, call:	+44 (0)1442 435529		
From the following countries, you may use the numbers shown:			

Country	Telephone Number	Country	Telephone Number
Austria	01 7956 7124	Luxembourg	342 0808128
Belgium	070 700 770	Netherlands	0900 777 7737
Denmark	7010 7289	Norway	815 33 047
Finland	01080 2783	Poland	00800 441 1357
France	0825 809 622	Portugal	707 200 123
Germany	01805 404 747	South Africa	0800 995 014
Hungary	06800 12813	Spain	9 021 60455
Ireland	1407 3387	Sweden	07711 14453
Israel	1800 945 3794	Switzerland	08488 50112
Italy	199 161346	U.K.	0870 909 3266

You can also obtain support in this region using the following URL:
`http://emea.3com.com/support/email.html`

Latin America Telephone Technical Support and Repair

Antigua	1 800 988 2112	Guatemala	AT&T +800 998 2112
Argentina	0 810 444 3COM	Haiti	57 1 657 0888
Aruba	1 800 998 2112	Honduras	AT&T +800 998 2112
Bahamas	1 800 998 2112	Jamaica	1 800 998 2112
Barbados	1 800 998 2112	Martinique	571 657 0888
Belize	52 5 201 0010	Mexico	01 800 849CARE
Bermuda	1 800 998 2112	Nicaragua	AT&T +800 998 2112
Bonaire	1 800 998 2112	Panama	AT&T +800 998 2112
Brazil	0800 13 3COM	Paraguay	54 11 4894 1888
Cayman	1 800 998 2112	Peru	AT&T +800 998 2112
Chile	AT&T +800 998 2112	Puerto Rico	1 800 998 2112
Colombia	AT&T +800 998 2112	Salvador	AT&T +800 998 2112
Costa Rica	AT&T +800 998 2112	Trinidad and Tobago	1 800 998 2112
Curacao	1 800 998 2112	Uruguay	AT&T +800 998 2112
Ecuador	AT&T +800 998 2112	Venezuela	AT&T +800 998 2112
Dominican Republic	AT&T +800 998 2112	Virgin Islands	57 1 657 0888

You can also obtain support in this region using the following:

Spanish speakers, enter the URL:
`http://lat.3com.com/lat/support/form.html`

Portuguese speakers, enter the URL:
`http://lat.3com.com/br/support/form.html`

English speakers in Latin America should send e-mail to:
`lat_support_anc@3com.com`

US and Canada Telephone Technical Support and Repair

1 800 876 3266

INDEX

Numbers
3C number 26

A
access levels of default users 54
automatic setup 44
    3Com Network Supervisor 44
    console port 44

B
browsers
    choosing 51

C
cable
    choosing the correct 31
    pin-outs 81
cascade cable 27
Cascade Extender Kit 27
Cascade Stacking Kit 27
CD-ROM 10
command line interface
    management 47
console port 19
conventions
    notice icons, About This Guide 8
    text, About This Guide 8
cross-over configuration 31

D
default
    settings 20
    users 54
documentation
    related 9

E
Ethernet address of the Switch 26

F
factory defaults 20

H
hardware features 14

I
installing the Switch 23
    prerequisites 24
IP addressing
    registered 62
IP configuration 35

L
LEDs 17
logging in as a default user 54

M
MAC address of the Switch 26
management
    methods 47
    preparing for 36
    setting up 33, 34
manual setup
    console port 40
    front panel port 37
MDI configuration 31
MDIX configuration 31

P
passwords
    of default users 54
pin assignments
    modem cable 82
    null modem cable 81
    RJ45 82
    serial cable 81
pin-outs 81
ports 16
    console 19
power over ethernet
    using 31
power socket 19
powering-up a Switch 4400 30
problem solving 57
    communication problems 61
    hardware problems 59

IP addressing 59
LEDs 58
product name 26

R

rack mounting a Switch 4400 25
Redundant Power System. *See* RPS
related documentation 9
RPS 19
connecting 30
socket 19

S

safety information
English 66
French 68
German 70, 72
Italian 75
serial number of the Switch 26
serial port. *See* console port
Simple Network Management Protocol. *See* SNMP
SNMP 52
SNMP management 48
setting up 52
socket
power 19
RPS 19
specifications, system 85
SSH 50
straight-through configuration 31
Switch
automatic setup 44
Switch 4400
3C number 26
console port 19
dimensions 85
Ethernet address 26
features 14
installation 23, 24
MAC address 26
power socket 19
powering-up 30
product name 26
rack mounting 25
RPS socket 19
serial number 26
size 85
stacking 27
unit information label 26
weight 85
system specifications 85

T

troubleshooting 57

U

unit information label 26

W

Web browsers
choosing 51
web interface
choosing a browser 51
web interface management 48
setting up 51

REGULATORY NOTICES

FCC STATEMENT

This equipment has been tested and found to comply with the limits for a Class A digital device, pursuant to part 15 of the FCC rules. These limits are designed to provide reasonable protection against harmful interference when the equipment is operated in a commercial environment. This equipment generates, uses and can radiate radio frequency energy and, if not installed and used in accordance with the instructions, may cause harmful interference to radio communications. Operation of this equipment in a residential area is likely to cause harmful interference to radio communications, in which case the user will be required to correct the interference at their own expense.

INFORMATION TO THE USER

If this equipment does cause interference to radio or television reception, which can be determined by turning the equipment off and on, the user is encouraged to try to correct the interference by one or more of the following measures:

- Reorient the receiving antenna.
- Relocate the equipment with respect to the receiver.
- Move the equipment away from the receiver.
- Plug the equipment into a different outlet so that equipment and receiver are on different branch circuits.

If necessary, the user should consult the dealer or an experienced radio/television technician for additional suggestions. The user may find the following booklet prepared by the Federal Communications Commission helpful:

How to Identify and Resolve Radio-TV Interference Problems

This booklet is available from the U.S. Government Printing Office, Washington, DC 20402, Stock No. 004-000-00345-4.

In order to meet FCC emissions limits, this equipment must be used only with cables which comply with IEEE 802.3.

CSA STATEMENT

This Class A digital apparatus meets all requirements of the Canadian Interference-Causing Equipment Regulations.

Cet appareil numérique de la classe A respecte toutes les exigences du Règlement sur le matériel brouilleur du Canada.

CE STATEMENT (EUROPE)

This product complies with the European Low Voltage Directive 73/23/EEC and EMC Directive 89/336/EEC as amended by European Directive 93/68/EEC.

Warning: This is a class A product. In a domestic environment this product may cause radio interference in which case the user may be required to take adequate measures.

VCCI STATEMENT

この装置は、情報処理装置等電波障害自主規制協議会（ＶＣＣＩ）の基準に基づくクラスＡ情報技術装置です。この装置を家庭環境で使用すると電波妨害を引き起こすことがあります。この場合には使用者が適切な対策を講ずるよう要求されることがあります。